Goodman
Air Conditioning & Heating

GPGM5

Packaged Gas / Electric
Up to 15.2 SEER2/ 81% AFUE
2 to 5 Tons

ASK ABOUT ENERGY STAR

ALL ALUMINUM COIL

Contents

Nomenclature 2
Product Specifications 3
Expanded Cooling Data 4
Airflow Data 28
Dimensions 32
Wiring Diagram 37
Accessories 39

Standard Features

- Durable, corrosion-resistant T-140 aluminized steel tubular heat exchanger
- High-efficiency two-stage scroll compressor
- Convertible airflow: horizontal or downflow application
- High Efficiency Multi-speed ECM indoor blower motor
- Copper tube/aluminum fin condenser coil
- All-aluminum evaporator coil on 2- to 4-ton units
- Aluminum-copper evaporator coil on 5-ton units
- Power-assisted combustion
- Loss-of-charge protection & high-pressure switch
- Two-stage gas valve; natural gas with easy conversion to propane with accessory kit
- Direct spark ignition system includes a microproces-sor-based control for the entire ignition sequence
- All blower operation and all safety circuits complete with self-diagnostics
- All models comply with California Low NOx emission standards (40ng/J NOx)
- This furnace does not comply with the SCAQMD Rule 1111 nor the SJVAPCD Rule 4905 14 ng/J NOx emission limit and therefore is not eligible for installation in California's South Coast Air Quality Management District (SCAQMD) nor the San Joaquin Valley Air Pollution Control District (SJVAPCD)
- AHRI Certified; ETL Listed

Cabinet Features

- Fully insulated heavy-gauge, zinc-coated steel cabinet with UV-resistant powder-paint finish
- Aluminum foil-facing internal insulation reinforced with fiberglass scrim
- Convenient access panels
- One roof curb fits 2-4 ton units
- Bottom, 2" high base rails for easier handling
- 2-4 ton models fit a standard-size pick-up truck
- When properly anchored, meets the 2020 Florida Building Code unit integrity requirements for hurricane-type winds (Anchor bracket kits available.)
- Meets cabinet air leakage requirements when tested in accordance with ASHRAE standard 193

20 YEAR HEAT EXCHANGER LIMITED WARRANTY* | 10 YEAR PARTS LIMITED WARRANTY*

AHRI CERTIFIED

COMPANY WITH ENVIRONMENTAL SYSTEM CERTIFIED BY DNV GL = ISO 14001 =

COMPANY WITH QUALITY SYSTEM CERTIFIED BY DNV GL = ISO 9001 =

Intertek

BBB ACCREDITED BUSINESS

* Complete warranty details available from your local dealer or at www.goodmanmfg.com. To receive the 20-Year Heat Exchanger Limited Warranty (good for as long as you own your home), and 10-Year Parts Limited Warranty, online registration must be completed within 60 days of installation. Online registration is not required in California or Quebec. The duration of warranty coverages in Texas differs in some cases.

G	P	G	M	5	36	080	4	1	A	A
1	2	3	4	5	6,7	8,9,10	11	12	13	14

Brand

G- Goodman® Brand

Product Category

P - Packaged Unit

Unit Type

G - Gas/Electric

Airflow

M - Multi-position

Efficiency

3 13.4 SEER2

5 15.2 SEER2

Tonnage Nominal

24 - 2 tons	42 - 3½ tons
30 - 2½ tons	48 - 4 tons
36 - 3 tons	60 - 5 tons

Heat Input

060 60 MBTU/H	100 100 MBTU/H
080 80 MBTU/H	140 140 MBTU/H

Refrigerant

4 - R-410A

Electrical

1 - 208/230V single-phase, 60 Hz

Major Revision

A

Minor Revision

A

	GPGM524 06041AA	GPGM530 08041AA	GPGM536 08041AA	GPGM542 10041AA	GPGM548 10041AA	GPGM560 14041AA
COOLING CAPACITY						
Total BTU/h	23,000	29,000	35,000	41,000	46,000	58,000
Sensible BTU/h	19,100	22,500	28,700	31,000	34,500	42,600
SEER2 / EER2	15.2 / 11.2	14.6/ 11.2	15.2 / 11.2	14.7/ 11.2	15.0/ 11.2	15.2/ 11.2
Decibels	78	76	79	80	79	78
AHRI Reference #s	209319556	209319559	209319563	209319567	209319570	209319573
HEATING CAPACITY (BTU/H)						
High-Fire Input / Output	60,000 / 48,600	80,000 / 64,800	80,000 / 64,800	100,000 / 81,000	100,000 / 81,000	135,000 / 109,350
Low-Fire Input / Output	45,000 / 36,450	60,000 / 48,600	60,000 / 48,600	75,000 / 60,750	75,000 / 60,750	101,250 / 82,000
AFUE	81	81	81	81	81	81
High/Low Temperature Rise Range	25-55/25-55	35- 65/35-65	35- 65/35-65	35- 65/35-65	35- 65/35-65	35-65/25-55
No. of Burners	3	4	4	5	5	6
EVAPORATOR MOTOR						
Type	ECM	ECM	ECM	ECM	ECM	ECM
Wheel (D x W)	10” x 8”	10” x 9”	11” x 10”	11” x 10”	11” x 10”	11” x 10”
Indoor Nominal CFM	800	950	1,200	1,250	1,300	2,000
No. of Speeds	5	5	5	5	5	5
Horsepower	1/2	1/2	3/4	3/4	3/4	1
EVAPORATOR COIL						
Face Area (ft^2)	4.3	4.3	5.7	5.7	5.7	9.2
Rows Deep/Fins per Inch	3 / 14	3 / 14	4 / 14	4 / 14	4 / 14	4 / 16
Piston Size (Cooling)	TXV	TXV	TXV	TXV	TXV	TXV
Filter Size (ft^2)	(1)20X20X1	(1)20X25X1	(1)25X25X1	(2)20X20X1	(2)20X20X1	(1)14X20X2 (2)20X20X2
Drain Size (NPT)	¾”	¾”	¾”	¾”	¾”	¾”
Refrigerant Charge (oz.)	70	64	114	143	100	150
CONDENSER FAN / COIL						
Horsepower- RPM	1/6- 810	1/4- 830	1/4- 1075	1/4- 1,075	1/4- 1,075	1/3- 1,000
Diameter / # of Blades	22” / 3	22” / 3	22” / 3	22” / 3	22” / 3	22” / 3
Outdoor Nominal CFM	2,200	2,200	3,100	3,200	3,100	4,200
Face Area (ft^2)	12.3	8.7	14.4	14.9	14.4	19
Rows Deep/Fins per Inch	1 / 24	2 / 27	2 / 27	2 / 16	2 / 27	2 / 28
COMPRESSOR						
Quantity / Type / Stage	1 / Scroll / 2	1 / Scroll / 2	1 / Scroll / 2	1 / Scroll / 2	1 / Scroll / 2	1 / Scroll / 2
Compressor RLA/LRA	10.9/62.9	13.1 / 73.0	14.1 / 84.2	19.9 / 150.7	20.4 / 122.1	27/ 139.9
ELECTRICAL DATA						
Voltage-Phase (Frequency 60Hz)	208/230-1	208/230-1	208/230-1	208/230-1	208/230-1	208/230-1
Indoor Blower FLA/LRA	3.8	4.3	6.8	6.8	6.8	6.9
Outdoor Fan FLA/LRA	0.95/ 2.0	1.3 / 3.0	1.4 / 3.2	1.4 / 3.2	1.4 / 3.2	2.8 / 4.4
Min. Circuit Ampacity [1]	18.4	22.0	25.8	33.1	33.7	43.3
Max. Overcurrent Protection [2]	25 amps	35 amps	35 amps	50 amps	50 amps	70amps
OPERATING / SHIP WEIGHTS (LBS)	370 / 380	397 / 407	490 / 500	495 / 505	490 / 500	655 / 713
ENERGY STAR CERTIFIED	NO	NO	NO	NO	NO	NO

[1] Wire size should be determined in accordance with National Electrical Codes. Extensive wire runs will require larger wire sizes.
[2] Must use time-delay fuses or HACR-type circuit breakers of the same size as noted.
Note: Always check the S&R plate for electrical data on the unit being installed.

			Outdoor Ambient Temperature																							
			65ºF				75ºF				85ºF				95ºF				105ºF				115ºF			
			Entering Indoor Wet Bulb Temperature																							
IDB	Airflow		59	63	67	71	59	63	67	71	59	63	67	71	59	63	67	71	59	63	67	71	59	63	67	71
70	490	MBh	16.8	17.1	17.6	-	16.7	16.9	17.4	-	16.2	16.5	17.0	-	15.5	15.7	16.2	-	14.6	14.8	15.3	-	13.7	13.9	14.5	-
		S/T	0.66	0.58	0.43	-	0.67	0.59	0.44	-	1.00	0.61	0.47	-	1.00	0.64	0.49	-	1.00	0.66	0.51	-	1.00	1.00	0.57	-
		ΔT	19.47	17.67	14.31	-	19.42	17.62	14.26	-	19.67	17.87	14.51	-	19.40	17.60	14.24	-	19.16	17.36	14.00	-	20.29	18.49	15.13	-
		KW	0.92	0.92	0.92	-	1.04	1.03	1.03	-	1.16	1.16	1.16	-	1.30	1.30	1.30	-	1.45	1.45	1.45	-	1.63	1.63	1.63	-
		Amps	3.50	3.50	3.49	-	4.00	3.99	3.98	-	4.55	4.54	4.53	-	5.14	5.14	5.13	-	5.81	5.80	5.80	-	6.59	6.58	6.58	-
		Hi PR	242	243	245	-	280	281	283	-	320	321	323	-	363	364	366	-	410	411	413	-	459	460	462	-
		Lo PR	131	133	136	-	139	141	144	-	146	148	151	-	152	154	157	-	158	159	163	-	165	167	170	-
	560	MBh	17.0	17.3	17.8	-	16.9	17.1	17.6	-	16.5	16.7	17.2	-	15.7	15.9	16.4	-	14.8	15.0	15.5	-	13.9	14.2	14.7	-
		S/T	0.73	0.65	0.50	-	0.74	0.65	0.50	-	1.00	0.68	0.53	-	1.00	0.70	0.55	-	1.00	0.73	0.58	-	1.00	1.00	0.63	-
		ΔT	18.38	16.58	13.22	-	18.33	16.53	13.17	-	18.58	16.78	13.42	-	18.31	16.51	13.15	-	18.07	16.27	12.91	-	19.20	17.40	14.04	-
		KW	0.93	0.93	0.92	-	1.04	1.04	1.04	-	1.17	1.17	1.17	-	1.30	1.30	1.30	-	1.46	1.46	1.46	-	1.64	1.64	1.63	-
		Amps	3.53	3.52	3.52	-	4.02	4.02	4.01	-	4.57	4.57	4.56	-	5.17	5.16	5.16	-	5.83	5.83	5.82	-	6.61	6.61	6.60	-
		Hi PR	244	245	247	-	282	283	285	-	322	323	325	-	365	366	368	-	412	413	415	-	461	463	464	-
		Lo PR	133	135	138	-	141	143	146	-	148	150	153	-	154	156	159	-	160	161	165	-	167	169	172	-
	630	MBh	17.3	17.5	18.1	-	17.2	17.4	17.9	-	16.7	17.0	17.5	-	16.0	16.2	16.7	-	15.0	15.3	15.8	-	14.2	14.4	14.9	-
		S/T	0.77	0.68	0.53	-	1.00	0.69	0.54	-	1.00	0.72	0.57	-	1.00	0.74	0.59	-	1.00	1.00	0.61	-	1.00	1.00	0.67	-
		ΔT	17.47	15.66	12.30	-	17.42	15.62	12.25	-	17.67	15.87	12.51	-	17.40	15.60	12.24	-	17.16	15.36	11.99	-	18.28	16.48	13.12	-
		KW	0.93	0.93	0.93	-	1.05	1.05	1.04	-	1.17	1.17	1.17	-	1.31	1.31	1.31	-	1.46	1.46	1.46	-	1.64	1.64	1.64	-
		Amps	3.55	3.55	3.54	-	4.04	4.04	4.03	-	4.59	4.59	4.58	-	5.19	5.19	5.18	-	5.85	5.85	5.84	-	6.64	6.63	6.62	-
		Hi PR	246	247	249	-	284	285	287	-	324	325	327	-	367	368	370	-	414	415	417	-	463	465	466	-
		Lo PR	135	137	140	-	143	145	148	-	150	152	155	-	156	158	161	-	162	164	167	-	169	171	174	-
75	490	MBh	16.8	17.1	17.6	18.3	16.7	16.9	17.4	18.2	16.2	16.5	17.0	17.8	15.5	15.7	16.2	17.0	14.6	14.8	15.3	16.1	13.7	14.0	14.5	15.2
		S/T	0.81	0.72	0.57	0.42	1.00	0.73	0.58	0.42	1.00	0.76	0.61	0.45	1.00	0.78	0.63	0.47	1.00	1.00	0.65	0.50	1.00	1.00	0.71	0.55
		ΔT	23.43	21.63	18.26	14.78	23.38	21.58	18.22	14.73	23.63	21.83	18.47	14.99	23.36	21.56	18.20	14.71	23.12	21.32	17.96	14.47	24.25	22.45	19.08	15.60
		KW	0.92	0.92	0.92	0.93	1.03	1.03	1.03	1.04	1.16	1.16	1.16	1.17	1.30	1.30	1.30	1.30	1.45	1.45	1.45	1.46	1.63	1.63	1.63	1.64
		Amps	3.50	3.50	3.49	3.52	3.99	3.99	3.98	4.02	4.54	4.54	4.53	4.57	5.14	5.13	5.13	5.16	5.80	5.80	5.79	5.83	6.59	6.58	6.57	6.61
		Hi PR	242	243	245	249	280	282	283	287	320	322	323	327	364	365	366	371	410	411	413	417	460	461	462	467
		Lo PR	131	133	136	142	139	141	144	150	146	148	151	157	152	154	157	163	158	160	163	168	165	167	170	176
	560	MBh	17.1	17.3	17.8	18.6	16.9	17.1	17.6	18.4	16.5	16.7	17.2	18.0	15.7	**15.9**	16.4	17.2	14.8	15.0	15.5	16.3	13.9	14.2	14.7	15.5
		S/T	0.87	0.79	0.64	0.48	1.00	0.79	0.65	0.49	1.00	0.82	0.67	0.52	1.00	**1.00**	0.69	0.54	1.00	1.00	0.72	0.56	1.00	1.00	0.78	0.62
		ΔT	22.34	20.54	17.18	13.69	22.29	20.49	17.13	13.65	22.54	20.74	17.38	13.90	22.27	**20.47**	17.11	13.63	22.03	20.23	16.87	13.39	23.16	21.36	18.00	14.51
		KW	0.93	0.93	0.92	0.93	1.04	1.04	1.04	1.05	1.17	1.17	1.16	1.17	1.30	**1.30**	1.30	1.31	1.46	1.46	1.45	1.46	1.64	1.64	1.63	1.64
		Amps	3.52	3.52	3.51	3.55	4.02	4.01	4.01	4.04	4.57	4.56	4.56	4.59	5.16	**5.16**	5.15	5.19	5.83	5.83	5.82	5.86	6.61	6.61	6.60	6.64
		Hi PR	244	245	247	251	283	284	285	290	323	324	325	330	366	**367**	368	373	412	413	415	419	462	463	464	469
		Lo PR	133	135	138	144	141	143	146	152	148	150	153	159	154	**156**	159	165	160	161	165	170	167	169	172	178
	630	MBh	17.3	17.6	18.1	18.8	17.2	17.4	17.9	18.7	16.7	17.0	17.5	18.2	16.0	16.2	16.7	17.5	15.1	15.3	15.8	16.6	14.2	14.4	14.9	15.7
		S/T	1.00	0.82	0.68	0.52	1.00	0.83	0.68	0.53	1.00	0.86	0.71	0.55	1.00	1.00	0.73	0.58	1.00	1.00	0.76	0.60	1.00	1.00	0.81	0.66
		ΔT	21.42	19.62	16.26	12.78	21.37	19.57	16.21	12.73	21.63	19.83	16.47	12.98	21.36	19.56	16.19	12.71	21.12	19.31	15.95	12.47	22.24	20.44	17.08	13.60
		KW	0.93	0.93	0.93	0.94	1.05	1.04	1.04	1.05	1.17	1.17	1.17	1.18	1.31	1.31	1.31	1.31	1.46	1.46	1.46	1.47	1.64	1.64	1.64	1.65
		Amps	3.55	3.54	3.53	3.57	4.04	4.04	4.03	4.06	4.59	4.59	4.58	4.62	5.19	5.18	5.17	5.21	5.85	5.85	5.84	5.88	6.63	6.63	6.62	6.66
		Hi PR	246	247	249	253	285	286	287	291	325	326	327	332	368	369	370	375	414	415	417	421	464	465	466	471
		Lo PR	135	137	140	146	143	145	148	154	150	152	155	161	156	158	161	167	162	164	167	172	169	171	174	180

IDB: Entering Indoor Dry Bulb Temperature

Shaded area reflects ACCA (TVA) conditions.

kW = Total system power

High and low pressures are measured at the liquid and suction service valves.

Amps = outdoor unit amps (comp.+fan)

Expanded Cooling Data — GPGM524***41 Stage 1 (cont.)

			Outdoor Ambient Temperature																							
			65ºF				75ºF				85ºF				95ºF				105ºF				115ºF			
			Entering Indoor Wet Bulb Temperature																							
IDB	Airflow		59	63	67	71	59	63	67	71	59	63	67	71	59	63	67	71	59	63	67	71	59	63	67	71
70	490	MBh	16.9	17.2	17.7	18.4	16.8	17.0	17.5	18.3	16.3	16.6	17.1	17.8	15.6	15.8	16.3	17.1	14.7	14.9	15.4	16.2	13.8	14.0	14.5	15.3
		S/T	1.00	0.86	0.71	0.55	1.00	0.87	0.72	0.56	1.00	1.00	0.75	0.59	1.00	1.00	0.77	0.61	1.00	1.00	0.79	0.63	1.00	1.00	1.00	0.69
		ΔT	27.41	25.61	22.25	18.77	27.36	25.56	22.20	18.72	27.62	25.82	22.45	18.97	27.35	25.54	22.18	18.70	27.10	25.30	21.94	18.46	28.23	26.43	23.07	19.59
		KW	0.92	0.92	0.92	0.93	1.04	1.03	1.03	1.04	1.16	1.16	1.16	1.17	1.30	1.30	1.30	1.30	1.45	1.45	1.45	1.46	1.63	1.63	1.63	1.64
		Amps	3.50	3.50	3.49	3.53	3.99	3.99	3.98	4.02	4.55	4.54	4.53	4.57	5.14	5.14	5.13	5.17	5.81	5.80	5.79	5.83	6.59	6.58	6.58	6.61
		Hi PR	243	244	245	250	281	282	284	288	321	322	324	328	364	365	367	371	410	412	413	417	460	461	463	467
		Lo PR	132	133	137	142	140	141	145	150	147	148	152	157	153	154	158	163	158	160	163	169	166	167	171	176
	560	MBh	17.1	17.4	17.9	18.7	17.0	17.2	17.7	18.5	16.6	16.8	17.3	18.1	15.8	16.0	**16.5**	17.3	14.9	15.1	15.6	16.4	14.0	14.3	14.8	15.5
		S/T	1.00	0.93	0.78	0.62	1.00	0.93	0.78	0.63	1.00	1.00	0.81	0.65	1.00	1.00	**0.83**	0.68	1.00	1.00	0.86	0.70	1.00	1.00	1.00	0.76
		ΔT	26.33	24.52	21.16	17.68	26.28	24.48	21.11	17.63	26.53	24.73	21.37	17.88	26.26	24.46	**21.10**	17.61	26.02	24.22	20.85	17.37	27.14	25.34	21.98	18.50
		KW	0.93	0.93	0.92	0.93	1.04	1.04	1.04	1.05	1.17	1.17	1.16	1.17	1.30	1.30	**1.30**	1.31	1.46	1.46	1.46	1.46	1.64	1.64	1.63	1.64
		Amps	3.53	3.52	3.51	3.55	4.02	4.02	4.01	4.05	4.57	4.57	4.56	4.60	5.17	5.16	**5.15**	5.19	5.83	5.83	5.82	5.86	6.61	6.61	6.60	6.64
		Hi PR	245	246	248	252	283	284	286	290	323	324	326	330	366	367	**369**	373	413	414	415	420	462	463	465	469
		Lo PR	134	135	139	144	142	143	147	152	149	150	154	159	155	156	**160**	165	160	162	165	171	168	169	173	178
	630	MBh	17.4	17.6	18.1	18.9	17.3	17.5	18.0	18.8	16.8	17.1	17.6	18.3	16.1	16.3	16.8	17.6	15.1	15.4	15.9	16.6	14.3	14.5	15.0	15.8
		S/T	1.00	0.96	0.81	0.66	1.00	1.00	0.82	0.66	1.00	1.00	0.85	0.69	1.00	1.00	0.87	0.71	1.00	1.00	1.00	0.74	1.00	1.00	1.00	0.79
		ΔT	25.41	23.61	20.25	16.76	25.36	23.56	20.20	16.72	25.61	23.81	20.45	16.97	25.34	23.54	20.18	16.70	25.10	23.30	19.94	16.46	26.23	24.43	21.07	17.58
		KW	0.93	0.93	0.93	0.94	1.05	1.05	1.04	1.05	1.17	1.17	1.17	1.18	1.31	1.31	1.31	1.32	1.46	1.46	1.46	1.47	1.64	1.64	1.64	1.65
		Amps	3.55	3.54	3.54	3.57	4.04	4.04	4.03	4.07	4.59	4.59	4.58	4.62	5.19	5.18	5.18	5.21	5.85	5.85	5.84	5.88	6.64	6.63	6.62	6.66
		Hi PR	247	248	250	254	285	286	288	292	325	326	328	332	368	369	371	375	415	416	417	422	464	465	467	471
		Lo PR	136	137	141	146	144	145	149	154	151	152	156	161	157	158	162	167	163	164	167	173	170	171	175	180
75	490	MBh	17.2	17.4	17.9	18.7	17.1	17.3	17.8	18.6	16.6	16.9	17.4	18.1	15.9	16.1	16.6	17.4	14.9	15.2	15.7	16.4	14.1	14.3	14.8	15.6
		S/T	1.00	0.97	0.82	0.67	1.00	1.00	0.83	0.67	1.00	1.00	0.86	0.70	1.00	1.00	1.00	0.72	1.00	1.00	1.00	0.74	1.00	1.00	1.00	0.80
		ΔT	30.95	29.15	25.79	22.30	30.90	29.10	25.74	22.25	31.15	29.35	25.99	22.51	30.88	29.08	25.72	22.23	30.64	28.84	25.48	21.99	31.77	29.97	26.60	23.12
		KW	0.92	0.92	0.92	0.93	1.04	1.04	1.03	1.04	1.16	1.16	1.16	1.17	1.30	1.30	1.30	1.31	1.45	1.45	1.45	1.46	1.63	1.63	1.63	1.64
		Amps	3.51	3.51	3.50	3.54	4.00	4.00	3.99	4.03	4.55	4.55	4.54	4.58	5.15	5.15	5.14	5.18	5.82	5.81	5.80	5.84	6.60	6.59	6.59	6.62
		Hi PR	244	245	247	251	282	283	285	289	322	323	325	329	365	366	368	372	412	413	414	419	461	462	464	468
		Lo PR	134	135	139	144	142	143	147	152	149	150	154	159	155	156	160	165	160	162	165	171	168	169	173	178
	560	MBh	17.4	17.7	18.2	18.9	17.3	17.5	18.0	18.8	16.8	17.1	17.6	18.3	16.1	16.3	16.8	17.6	15.2	15.4	15.9	16.7	14.3	14.6	15.1	15.8
		S/T	1.00	1.00	0.89	0.73	1.00	1.00	0.89	0.74	1.00	1.00	0.92	0.77	1.00	1.00	1.00	0.79	1.00	1.00	1.00	0.81	1.00	1.00	1.00	0.87
		ΔT	29.86	28.06	24.70	21.21	29.81	28.01	24.65	21.17	30.06	28.26	24.90	21.42	29.79	27.99	24.63	21.15	29.55	27.75	24.39	20.91	30.68	28.88	25.52	22.03
		KW	0.93	0.93	0.93	0.94	1.04	1.04	1.04	1.05	1.17	1.17	1.17	1.18	1.31	1.31	1.30	1.31	1.46	1.46	1.46	1.47	1.64	1.64	1.64	1.65
		Amps	3.54	3.53	3.52	3.56	4.03	4.03	4.02	4.06	4.58	4.58	4.57	4.61	5.18	5.17	5.16	5.20	5.84	5.84	5.83	5.87	6.62	6.62	6.61	6.65
		Hi PR	246	247	249	253	284	285	287	291	324	325	327	331	367	368	370	374	414	415	416	421	463	464	466	470
		Lo PR	136	137	141	146	144	145	149	154	151	152	156	161	157	158	162	167	162	164	167	173	170	171	175	180
	630	MBh	17.7	17.9	18.4	19.2	17.5	17.8	18.3	19.0	17.1	17.3	17.8	18.6	16.3	16.6	17.1	17.9	15.4	15.7	16.2	16.9	14.6	14.8	15.3	16.1
		S/T	1.00	1.00	0.92	0.77	1.00	1.00	0.93	0.77	1.00	1.00	0.96	0.80	1.00	1.00	1.00	0.82	1.00	1.00	1.00	0.85	1.00	1.00	1.00	1.00
		ΔT	28.94	27.14	23.78	20.30	28.89	27.09	23.73	20.25	29.15	27.35	23.99	20.50	28.88	27.08	23.71	20.23	28.64	26.84	23.47	19.99	29.76	27.96	24.60	21.12
		KW	0.93	0.93	0.93	0.94	1.05	1.05	1.05	1.05	1.17	1.17	1.17	1.18	1.31	1.31	1.31	1.32	1.46	1.46	1.46	1.47	1.64	1.64	1.64	1.65
		Amps	3.56	3.55	3.55	3.58	4.05	4.05	4.04	4.08	4.60	4.60	4.59	4.63	5.20	5.19	5.19	5.22	5.86	5.86	5.85	5.89	6.64	6.64	6.63	6.67
		Hi PR	248	249	251	255	286	287	289	293	326	327	329	333	369	370	372	376	416	417	418	423	465	466	468	472
		Lo PR	138	139	143	148	146	147	151	156	153	154	158	163	159	160	164	169	164	166	169	175	172	173	177	182

IDB: Entering Indoor Dry Bulb Temperature

Shaded area reflects AHRI conditions

kW = Total system power

High and low pressures are measured at the liquid and suction service valves.

Amps = outdoor unit amps (comp.+fan)

Expanded Cooling Data — GPGM524***41 Stage 2

			Outdoor Ambient Temperature																							
			65ºF				75ºF				85ºF				95ºF				105ºF				115ºF			
			Entering Indoor Wet Bulb Temperature																							
IDB	Airflow		59	63	67	71	59	63	67	71	59	63	67	71	59	63	67	71	59	63	67	71	59	63	67	71
70	700	MBh	23.4	23.7	24.4	-	23.2	23.5	24.2	-	22.6	22.9	23.6	-	21.5	21.9	22.6	-	20.2	20.6	21.3	-	19.1	19.4	20.1	-
		S/T	0.65	0.57	0.42	-	0.65	0.57	0.43	-	0.68	0.60	0.45	-	1.00	0.62	0.47	-	1.00	0.64	0.50	-	1.00	0.70	0.55	-
		ΔT	20.17	18.31	14.83	-	20.12	18.26	14.77	-	20.39	18.52	15.04	-	20.10	18.24	14.76	-	19.86	17.99	14.51	-	21.02	19.16	15.67	-
		KW	1.47	1.46	1.46	-	1.65	1.64	1.64	-	1.85	1.85	1.84	-	2.07	2.06	2.06	-	2.31	2.31	2.30	-	2.59	2.59	2.59	-
		Amps	5.57	5.56	5.55	-	6.35	6.35	6.33	-	7.23	7.22	7.21	-	8.17	8.17	8.16	-	9.23	9.23	9.21	-	10.48	10.47	10.46	-
		Hi PR	253	254	256	-	293	294	296	-	335	336	338	-	380	381	383	-	429	430	432	-	481	482	483	-
		Lo PR	128	129	132	-	135	137	140	-	142	144	147	-	148	149	153	-	154	155	158	-	161	162	165	-
	800	MBh	23.7	24.0	24.7	-	23.5	23.8	24.5	-	22.9	23.2	23.9	-	21.8	22.2	22.9	-	20.6	20.9	21.6	-	19.4	19.7	20.4	-
		S/T	0.71	0.63	0.48	-	0.72	0.64	0.49	-	1.00	0.66	0.52	-	1.00	0.68	0.54	-	1.00	0.71	0.56	-	1.00	1.00	0.62	-
		ΔT	19.05	17.18	13.70	-	19.00	17.13	13.65	-	19.26	17.39	13.91	-	18.98	17.11	13.63	-	18.73	16.86	13.38	-	19.90	18.03	14.55	-
		KW	1.47	1.47	1.47	-	1.66	1.65	1.65	-	1.86	1.86	1.85	-	2.07	2.07	2.07	-	2.32	2.32	2.31	-	2.60	2.60	2.60	-
		Amps	5.61	5.60	5.59	-	6.39	6.39	6.37	-	7.27	7.26	7.25	-	8.22	8.21	8.20	-	9.27	9.27	9.25	-	10.52	10.51	10.50	-
		Hi PR	255	256	258	-	295	296	298	-	337	338	340	-	382	383	385	-	431	432	434	-	483	484	486	-
		Lo PR	129	131	134	-	137	139	142	-	144	146	149	-	150	151	155	-	155	157	160	-	162	164	167	-
	900	MBh	24.1	24.4	25.1	-	23.9	24.2	24.9	-	23.3	23.6	24.3	-	22.2	22.5	23.2	-	20.9	21.3	21.9	-	19.7	20.1	20.8	-
		S/T	0.75	0.67	0.52	-	0.75	0.67	0.53	-	1.00	0.70	0.55	-	1.00	0.72	0.57	-	1.00	0.74	0.60	-	1.00	1.00	0.65	-
		ΔT	18.10	16.23	12.75	-	18.05	16.18	12.70	-	18.31	16.44	12.96	-	18.03	16.16	12.68	-	17.78	15.91	12.43	-	18.95	17.08	13.60	-
		KW	1.48	1.48	1.48	-	1.66	1.66	1.66	-	1.86	1.86	1.86	-	2.08	2.08	2.08	-	2.33	2.32	2.32	-	2.61	2.61	2.61	-
		Amps	5.64	5.64	5.62	-	6.43	6.42	6.41	-	7.30	7.30	7.28	-	8.25	8.24	8.23	-	9.31	9.30	9.29	-	10.55	10.54	10.53	-
		Hi PR	257	259	260	-	297	298	300	-	339	340	342	-	384	385	387	-	433	434	436	-	485	486	488	-
		Lo PR	132	133	136	-	139	141	144	-	146	148	151	-	152	153	157	-	158	159	162	-	165	166	169	-
75	700	MBh	23.4	23.7	24.4	25.5	23.2	23.5	24.2	25.3	22.6	22.9	23.6	24.7	21.5	21.9	22.6	23.6	20.3	20.6	21.3	22.4	19.1	19.4	20.1	21.2
		S/T	0.78	0.70	0.56	0.41	1.00	0.71	0.56	0.41	1.00	0.74	0.59	0.44	1.00	0.76	0.61	0.46	1.00	1.00	0.64	0.48	1.00	1.00	0.69	0.54
		ΔT	24.28	22.41	18.93	15.32	24.23	22.36	18.88	15.27	24.49	22.62	19.14	15.53	24.21	22.34	18.86	15.25	23.96	22.09	18.61	15.00	25.13	23.26	19.78	16.17
		KW	1.46	1.46	1.46	1.47	1.64	1.64	1.64	1.65	1.85	1.84	1.84	1.86	2.06	2.06	2.06	2.07	2.31	2.31	2.30	2.32	2.59	2.59	2.59	2.60
		Amps	5.56	5.56	5.54	5.60	6.35	6.34	6.33	6.39	7.22	7.22	7.20	7.26	8.17	8.16	8.15	8.21	9.23	9.22	9.21	9.27	10.47	10.46	10.45	10.51
		Hi PR	253	255	256	261	293	294	296	301	335	336	338	343	380	381	383	388	429	430	432	436	481	482	484	488
		Lo PR	128	129	132	138	135	137	140	146	142	144	147	152	148	150	153	158	154	155	158	164	161	162	165	171
	800	MBh	23.7	24.1	24.8	25.8	23.5	23.8	24.5	25.6	22.9	23.2	23.9	25.0	21.8	**22.2**	22.9	23.9	20.6	20.9	21.6	22.7	19.4	19.7	20.4	21.5
		S/T	0.85	0.77	0.62	0.47	1.00	0.77	0.63	0.48	1.00	0.80	0.66	0.50	1.00	**0.82**	0.68	0.52	1.00	1.00	0.70	0.55	1.00	1.00	0.75	0.60
		ΔT	23.15	21.28	17.80	14.19	23.10	21.23	17.75	14.14	23.36	21.50	18.01	14.40	23.08	**21.21**	17.73	14.12	22.83	20.96	17.48	13.87	24.00	22.13	18.65	15.04
		KW	1.47	1.47	1.47	1.48	1.65	1.65	1.65	1.66	1.86	1.85	1.85	1.86	2.07	**2.07**	2.07	2.08	2.32	2.32	2.31	2.33	2.60	2.60	2.60	2.61
		Amps	5.60	5.60	5.58	5.64	6.39	6.38	6.37	6.43	7.26	7.26	7.24	7.30	8.21	**8.20**	8.19	8.25	9.27	9.26	9.25	9.31	10.51	10.50	10.49	10.55
		Hi PR	256	257	258	263	296	297	298	303	337	338	340	345	382	**384**	385	390	431	432	434	438	483	484	486	490
		Lo PR	130	131	134	140	137	139	142	148	144	146	149	154	150	**151**	155	160	155	157	160	166	163	164	167	173
	900	MBh	24.1	24.4	25.1	26.2	23.9	24.2	24.9	26.0	23.3	23.6	24.3	25.4	22.2	22.5	23.2	24.3	20.9	21.3	22.0	23.0	19.8	20.1	20.8	21.9
		S/T	0.88	0.80	0.66	0.51	1.00	0.81	0.67	0.51	1.00	0.84	0.69	0.54	1.00	0.86	0.71	0.56	1.00	1.00	0.74	0.58	1.00	1.00	0.79	0.64
		ΔT	22.20	20.33	16.85	13.24	22.15	20.28	16.80	13.19	22.41	20.55	17.06	13.45	22.13	20.26	16.78	13.17	21.88	20.02	16.53	12.92	23.05	21.18	17.70	14.09
		KW	1.48	1.48	1.48	1.49	1.66	1.66	1.66	1.67	1.86	1.86	1.86	1.87	2.08	2.08	2.08	2.09	2.32	2.32	2.32	2.33	2.61	2.61	2.61	2.62
		Amps	5.64	5.63	5.62	5.68	6.42	6.42	6.40	6.46	7.30	7.29	7.28	7.34	8.24	8.24	8.22	8.28	9.30	9.30	9.28	9.34	10.54	10.54	10.53	10.59
		Hi PR	258	259	261	265	298	299	300	305	339	341	342	347	385	386	387	392	433	434	436	440	485	486	488	492
		Lo PR	132	133	136	142	139	141	144	150	146	148	151	156	152	153	157	162	158	159	162	168	165	166	169	175

IDB: Entering Indoor Dry Bulb Temperature

High and low pressures are measured at the liquid and suction service valves.

Shaded area reflects ACCA (TVA) conditions

kW = Total system power

Amps = outdoor unit amps (comp.+fan)

Expanded Cooling Data — GPGM524***41 Stage 2 (cont.)

			Outdoor Ambient Temperature																							
			65ºF				75ºF				85ºF				95ºF				105ºF				115ºF			
			Entering Indoor Wet Bulb Temperature																							
IDB	Airflow		59	63	67	71	59	63	67	71	59	63	67	71	59	63	67	71	59	63	67	71	59	63	67	71
80	700	MBh	23.5	23.9	24.6	25.6	23.3	23.7	24.4	25.4	22.7	23.0	23.7	24.8	21.7	22.0	22.7	23.8	20.4	20.7	21.4	22.5	19.2	19.5	20.2	21.3
		S/T	1.00	0.84	0.69	0.54	1.00	0.84	0.70	0.55	1.00	0.87	0.73	0.57	1.00	1.00	0.75	0.59	1.00	1.00	0.77	0.62	1.00	1.00	0.82	0.67
		ΔT	28.41	26.54	23.06	19.45	28.36	26.49	23.01	19.40	28.62	26.75	23.27	19.66	28.34	26.47	22.99	19.38	28.09	26.22	22.74	19.13	29.26	27.39	23.91	20.30
		KW	1.47	1.46	1.46	1.47	1.65	1.64	1.64	1.66	1.85	1.85	1.84	1.86	2.06	2.06	2.06	2.07	2.31	2.31	2.30	2.32	2.59	2.59	2.59	2.60
		Amps	5.57	5.56	5.55	5.61	6.35	6.35	6.33	6.39	7.23	7.22	7.21	7.27	8.17	8.17	8.15	8.21	9.23	9.23	9.21	9.27	10.47	10.47	10.45	10.51
		Hi PR	254	255	257	261	294	295	297	301	336	337	339	343	381	382	384	388	429	430	432	437	481	482	484	489
		Lo PR	128	130	133	138	136	138	141	146	143	144	148	153	149	150	153	159	154	156	159	164	161	163	166	171
	800	MBh	23.8	24.2	24.9	25.9	23.6	24.0	24.7	25.7	23.0	23.4	24.1	25.1	22.0	22.3	**23.0**	24.1	20.7	21.0	21.7	22.8	19.5	19.8	20.5	21.6
		S/T	1.00	0.90	0.76	0.60	1.00	0.91	0.76	0.61	1.00	1.00	0.79	0.64	1.00	1.00	**0.81**	0.66	1.00	1.00	0.83	0.68	1.00	1.00	1.00	0.74
		ΔT	27.28	25.41	21.93	18.32	27.23	25.36	21.88	18.27	27.49	25.63	22.14	18.53	27.21	25.34	**21.86**	18.25	26.96	25.09	21.61	18.00	28.13	26.26	22.78	19.17
		KW	1.47	1.47	1.47	1.48	1.66	1.65	1.65	1.66	1.86	1.86	1.85	1.87	2.07	2.07	**2.07**	2.08	2.32	2.32	2.31	2.33	2.60	2.60	2.60	2.61
		Amps	5.61	5.60	5.59	5.65	6.39	6.39	6.37	6.43	7.27	7.26	7.25	7.31	8.21	8.21	**8.19**	8.25	9.27	9.27	9.25	9.31	10.51	10.51	10.50	10.56
		Hi PR	256	257	259	263	296	297	299	303	338	339	341	345	383	384	**386**	390	432	433	434	439	483	484	486	491
		Lo PR	130	132	135	140	138	139	143	148	145	146	149	155	150	152	**155**	161	156	158	161	166	163	165	168	173
	900	MBh	24.2	24.5	25.2	26.3	24.0	24.3	25.0	26.1	23.4	23.7	24.4	25.5	22.3	22.7	23.4	24.4	21.1	21.4	22.1	23.2	19.9	20.2	20.9	22.0
		S/T	1.00	0.94	0.79	0.64	1.00	0.94	0.80	0.65	1.00	1.00	0.83	0.67	1.00	1.00	0.85	0.69	1.00	1.00	0.87	0.72	1.00	1.00	1.00	0.77
		ΔT	26.33	24.47	20.98	17.37	26.28	24.41	20.93	17.32	26.54	24.68	21.19	17.58	26.26	24.39	20.91	17.30	26.01	24.15	20.66	17.05	27.18	25.31	21.83	18.22
		KW	1.48	1.48	1.48	1.49	1.66	1.66	1.66	1.67	1.86	1.86	1.86	1.87	2.08	2.08	2.08	2.09	2.33	2.32	2.32	2.33	2.61	2.61	2.61	2.62
		Amps	5.64	5.64	5.62	5.68	6.43	6.42	6.41	6.47	7.30	7.30	7.28	7.34	8.25	8.24	8.23	8.29	9.31	9.30	9.29	9.35	10.55	10.54	10.53	10.59
		Hi PR	258	259	261	265	298	299	301	305	340	341	343	347	385	386	388	392	434	435	436	441	485	487	488	493
		Lo PR	132	134	137	142	140	141	145	150	147	148	152	157	152	154	157	163	158	160	163	168	165	167	170	175
85	700	MBh	23.9	24.3	25.0	26.0	23.7	24.1	24.7	25.8	23.1	23.4	24.1	25.2	22.1	22.4	23.1	24.2	20.8	21.1	21.8	22.9	19.6	19.9	20.6	21.7
		S/T	1.00	0.94	0.80	0.65	1.00	1.00	0.81	0.65	1.00	1.00	0.83	0.68	1.00	1.00	0.85	0.70	1.00	1.00	1.00	0.73	1.00	1.00	1.00	0.78
		ΔT	32.07	30.20	26.72	23.11	32.02	30.15	26.67	23.06	32.28	30.42	26.93	23.32	32.00	30.13	26.65	23.04	31.75	29.88	26.40	22.79	32.92	31.05	27.57	23.96
		KW	1.47	1.47	1.46	1.48	1.65	1.65	1.64	1.66	1.85	1.85	1.85	1.86	2.07	2.07	2.06	2.08	2.31	2.31	2.31	2.32	2.60	2.60	2.59	2.61
		Amps	5.58	5.58	5.56	5.62	6.37	6.36	6.35	6.41	7.24	7.24	7.22	7.28	8.19	8.18	8.17	8.23	9.25	9.24	9.23	9.29	10.49	10.48	10.47	10.53
		Hi PR	255	256	258	262	295	296	298	302	337	338	340	344	382	383	385	389	431	432	433	438	482	484	485	490
		Lo PR	130	132	135	140	138	139	143	148	145	146	149	155	150	152	155	161	156	158	161	166	163	165	168	173
	800	MBh	24.2	24.6	25.3	26.3	24.0	24.4	25.1	26.1	23.4	23.7	24.4	25.5	22.4	22.7	23.4	24.5	21.1	21.4	22.1	23.2	19.9	20.2	20.9	22.0
		S/T	1.00	1.00	0.86	0.71	1.00	1.00	0.87	0.72	1.00	1.00	0.90	0.75	1.00	1.00	0.92	0.77	1.00	1.00	1.00	0.79	1.00	1.00	1.00	0.84
		ΔT	30.94	29.08	25.59	21.98	30.89	29.03	25.54	21.93	31.15	29.29	25.80	22.20	30.87	29.01	25.52	21.91	30.62	28.76	25.27	21.66	31.79	29.93	26.44	22.83
		KW	1.48	1.48	1.47	1.49	1.66	1.66	1.65	1.67	1.86	1.86	1.86	1.87	2.08	2.08	2.07	2.09	2.32	2.32	2.32	2.33	2.61	2.61	2.60	2.62
		Amps	5.62	5.62	5.60	5.66	6.41	6.40	6.39	6.45	7.28	7.28	7.26	7.32	8.23	8.22	8.21	8.27	9.29	9.28	9.27	9.33	10.53	10.52	10.51	10.57
		Hi PR	257	258	260	265	297	298	300	304	339	340	342	346	384	385	387	391	433	434	436	440	485	486	487	492
		Lo PR	132	134	137	142	140	141	145	150	147	148	151	157	152	154	157	163	158	160	163	168	165	167	170	175
	900	MBh	24.6	24.9	25.6	26.7	24.4	24.7	25.4	26.5	23.8	24.1	24.8	25.9	22.7	23.1	23.8	24.8	21.4	21.8	22.5	23.5	20.3	20.6	21.3	22.4
		S/T	1.00	1.00	0.90	0.75	1.00	1.00	0.91	0.75	1.00	1.00	0.93	0.78	1.00	1.00	1.00	0.80	1.00	1.00	1.00	0.83	1.00	1.00	1.00	0.88
		ΔT	29.99	28.13	24.64	21.04	29.94	28.08	24.59	20.98	30.21	28.34	24.86	21.25	29.92	28.06	24.57	20.97	29.67	27.81	24.33	20.72	30.84	28.98	25.49	21.88
		KW	1.49	1.48	1.48	1.50	1.67	1.67	1.66	1.68	1.87	1.87	1.86	1.88	2.09	2.08	2.08	2.09	2.33	2.33	2.32	2.34	2.61	2.61	2.61	2.62
		Amps	5.66	5.65	5.64	5.70	6.44	6.43	6.42	6.48	7.32	7.31	7.30	7.36	8.26	8.26	8.24	8.30	9.32	9.32	9.30	9.36	10.56	10.56	10.54	10.60
		Hi PR	259	260	262	267	299	300	302	307	341	342	344	348	386	387	389	394	435	436	438	442	487	488	490	494
		Lo PR	134	136	139	144	142	143	147	152	149	150	153	159	154	156	159	165	160	162	165	170	167	169	172	177

IDB: Entering Indoor Dry Bulb Temperature

Shaded area reflects AHRI (TVA) conditions

kW = Total system power

High and low pressures are measured at the liquid and suction service valves.

Amps = outdoor unit amps (comp.+fan)

Expanded Cooling Data — GPGM530***41 Stage 1

			Outdoor Ambient Temperature																							
			65ºF				75ºF				85ºF				95ºF				105ºF				115ºF			
			Entering Indoor Wet Bulb Temperature																							
IDB	Airflow		59	63	67	71	59	63	67	71	59	63	67	71	59	63	67	71	59	63	67	71	59	63	67	71
70	560	MBh	21.1	21.4	22.1	-	21.0	21.3	21.9	-	20.4	20.7	21.3	-	19.5	19.8	20.4	-	18.3	18.6	19.2	-	17.2	17.5	18.2	-
		S/T	0.61	0.53	0.39	-	0.62	0.54	0.40	-	0.64	0.56	0.42	-	0.66	0.58	0.44	-	1.00	0.61	0.46	-	1.00	0.66	0.52	-
		ΔT	20.06	18.23	14.83	-	20.01	18.18	14.78	-	20.26	18.44	15.03	-	19.99	18.16	14.76	-	19.74	17.92	14.51	-	20.89	19.06	15.66	-
		KW	1.16	1.16	1.16	-	1.30	1.30	1.30	-	1.46	1.46	1.46	-	1.64	1.63	1.63	-	1.83	1.83	1.83	-	2.06	2.05	2.05	-
		Amps	4.37	4.37	4.36	-	5.00	4.99	4.98	-	5.69	5.69	5.67	-	6.44	6.44	6.43	-	7.28	7.28	7.27	-	8.27	8.26	8.25	-
		Hi PR	250	252	253	-	290	291	293	-	332	333	334	-	376	377	379	-	424	425	427	-	476	477	479	-
		Lo PR	123	124	128	-	130	132	135	-	137	138	142	-	142	144	147	-	148	149	153	-	155	156	159	-
	665	MBh	21.5	21.8	22.4	-	21.3	21.6	22.2	-	20.7	21.0	21.7	-	19.8	20.1	20.7	-	18.6	18.9	19.6	-	17.6	17.9	18.5	-
		S/T	0.69	0.61	0.47	-	0.70	0.62	0.48	-	0.73	0.65	0.51	-	1.00	0.67	0.53	-	1.00	0.69	0.55	-	1.00	0.74	0.60	-
		ΔT	18.62	16.80	13.39	-	18.57	16.75	13.34	-	18.83	17.01	13.60	-	18.55	16.73	13.32	-	18.31	16.49	13.08	-	19.45	17.63	14.22	-
		KW	1.17	1.17	1.17	-	1.31	1.31	1.31	-	1.47	1.47	1.47	-	1.65	1.64	1.64	-	1.84	1.84	1.83	-	2.06	2.06	2.06	-
		Amps	4.42	4.41	4.40	-	5.04	5.03	5.02	-	5.73	5.73	5.72	-	6.48	6.48	6.47	-	7.32	7.32	7.31	-	8.31	8.30	8.29	-
		Hi PR	253	254	256	-	293	294	296	-	334	335	337	-	379	380	382	-	427	428	430	-	479	480	481	-
		Lo PR	125	127	130	-	133	134	137	-	139	141	144	-	145	146	149	-	150	152	155	-	157	159	162	-
	840	MBh	22.3	22.6	23.2	-	22.1	22.4	23.0	-	21.5	21.8	22.5	-	20.6	20.9	21.5	-	19.4	19.7	20.3	-	18.4	18.7	19.3	-
		S/T	0.74	0.66	0.52	-	0.75	0.67	0.53	-	1.00	0.69	0.55	-	1.00	0.71	0.57	-	1.00	0.74	0.60	-	1.00	0.79	0.65	-
		ΔT	16.79	14.97	11.56	-	16.74	14.92	11.51	-	17.00	15.17	11.77	-	16.72	14.90	11.49	-	16.48	14.65	11.25	-	17.62	15.80	12.39	-
		KW	1.18	1.18	1.18	-	1.33	1.32	1.32	-	1.48	1.48	1.48	-	1.66	1.66	1.65	-	1.85	1.85	1.85	-	2.08	2.08	2.07	-
		Amps	4.47	4.46	4.45	-	5.09	5.09	5.08	-	5.79	5.78	5.77	-	6.54	6.53	6.52	-	7.38	7.37	7.36	-	8.36	8.36	8.35	-
		Hi PR	258	259	260	-	297	298	300	-	339	340	342	-	383	384	386	-	432	433	434	-	483	484	486	-
		Lo PR	130	131	134	-	137	139	142	-	144	145	148	-	149	151	154	-	155	156	159	-	162	163	166	-
75	560	MBh	21.2	21.5	22.1	23.1	21.0	21.3	21.9	22.9	20.4	20.7	21.3	22.3	19.5	19.8	20.4	21.4	18.3	18.6	19.2	20.2	17.2	17.5	18.2	19.1
		S/T	0.74	0.66	0.52	0.37	0.75	0.67	0.53	0.38	1.00	0.70	0.56	0.41	1.00	0.72	0.58	0.43	1.00	0.74	0.60	0.45	1.00	1.00	0.65	0.50
		ΔT	24.07	22.24	18.84	15.31	24.02	22.19	18.79	15.26	24.27	22.45	19.04	15.52	24.00	22.17	18.77	15.24	23.76	21.93	18.53	15.00	24.90	23.07	19.67	16.14
		KW	1.16	1.16	1.16	1.17	1.30	1.30	1.30	1.31	1.46	1.46	1.46	1.47	1.63	1.63	1.63	1.64	1.83	1.83	1.82	1.84	2.05	2.05	2.05	2.06
		Amps	4.37	4.36	4.35	4.40	4.99	4.99	4.98	5.02	5.69	5.68	5.67	5.72	6.44	6.43	6.42	6.47	7.28	7.27	7.26	7.31	8.26	8.26	8.25	8.29
		Hi PR	251	252	253	258	290	291	293	297	332	333	335	339	376	378	379	384	425	426	427	432	476	477	479	483
		Lo PR	123	124	128	133	130	132	135	140	137	138	142	147	143	144	147	152	148	149	153	158	155	156	159	165
	665	MBh	21.5	21.8	22.4	23.4	21.3	21.6	22.2	23.2	20.8	21.1	21.7	22.7	19.8	**20.1**	20.7	21.7	18.6	18.9	19.6	20.5	17.6	17.9	18.5	19.5
		S/T	0.83	0.75	0.61	0.46	0.83	0.76	0.61	0.47	1.00	0.78	0.64	0.49	1.00	**0.80**	0.66	0.51	1.00	0.82	0.68	0.53	1.00	1.00	0.74	0.59
		ΔT	22.63	20.81	17.40	13.87	22.58	20.76	17.35	13.83	22.84	21.02	17.61	14.08	22.57	**20.74**	17.34	13.81	22.32	20.50	17.09	13.56	23.46	21.64	18.23	14.70
		KW	1.17	1.17	1.17	1.18	1.31	1.31	1.31	1.32	1.47	1.47	1.47	1.48	1.64	**1.64**	1.64	1.65	1.84	1.84	1.83	1.84	2.06	2.06	2.06	2.07
		Amps	4.41	4.41	4.40	4.44	5.03	5.03	5.02	5.07	5.73	5.72	5.71	5.76	6.48	**6.47**	6.46	6.51	7.32	7.31	7.30	7.35	8.30	8.30	8.29	8.34
		Hi PR	253	254	256	261	293	294	296	300	334	336	337	342	379	**380**	382	386	427	428	430	435	479	480	482	486
		Lo PR	125	127	130	135	133	134	137	143	139	141	144	149	145	**146**	149	155	150	152	155	160	157	159	162	167
	840	MBh	22.3	22.6	23.2	24.2	22.1	22.4	23.0	24.0	21.5	21.8	22.5	23.4	20.6	20.9	21.5	22.5	19.4	19.7	20.4	21.3	18.4	18.7	19.3	20.3
		S/T	0.88	0.80	0.65	0.51	1.00	0.80	0.66	0.51	1.00	0.83	0.69	0.54	1.00	0.85	0.71	0.56	1.00	1.00	0.73	0.58	1.00	1.00	0.78	0.64
		ΔT	20.80	18.98	15.57	12.04	20.75	18.93	15.52	11.99	21.01	19.18	15.78	12.25	20.73	18.91	15.50	11.97	20.49	18.66	15.26	11.73	21.63	19.81	16.40	12.87
		KW	1.18	1.18	1.18	1.19	1.32	1.32	1.32	1.33	1.48	1.48	1.48	1.49	1.66	1.66	1.65	1.66	1.85	1.85	1.85	1.86	2.08	2.08	2.07	2.08
		Amps	4.46	4.46	4.45	4.50	5.09	5.08	5.07	5.12	5.78	5.78	5.77	5.81	6.53	6.53	6.52	6.56	7.37	7.37	7.36	7.40	8.36	8.35	8.34	8.39
		Hi PR	258	259	261	265	297	298	300	305	339	340	342	346	384	385	386	391	432	433	435	439	483	484	486	490
		Lo PR	130	131	134	140	137	139	142	147	144	145	148	154	149	151	154	159	155	156	159	165	162	163	166	172

IDB: Entering Indoor Dry Bulb Temperature

High and low pressures are measured at the liquid and suction service valves.

Shaded area reflects ACCA (TVA) conditions

kW = Total system power

Amps = outdoor unit amps (comp.+fan)

*Expanded Cooling Data — GPGM530***41 Stage 1 (cont.)*

			Outdoor Ambient Temperature																							
			65ºF				75ºF				85ºF				95ºF				105ºF				115ºF			
			Entering Indoor Wet Bulb Temperature																							
IDB	Airflow		59	63	67	71	59	63	67	71	59	63	67	71	59	63	67	71	59	63	67	71	59	63	67	71
80	560	MBh	21.3	21.6	22.2	23.2	21.1	21.4	22.0	23.0	20.5	20.8	21.5	22.4	19.6	19.9	20.5	21.5	18.4	18.7	19.3	20.3	17.3	17.6	18.3	19.2
		S/T	1.00	0.80	0.65	0.51	1.00	0.80	0.66	0.51	1.00	0.83	0.69	0.54	1.00	0.85	0.71	0.56	1.00	1.00	0.73	0.58	1.00	1.00	0.78	0.63
		ΔT	28.11	26.28	22.88	19.35	28.06	26.23	22.83	19.30	28.31	26.49	23.08	19.55	28.04	26.21	22.81	19.28	27.79	25.97	22.56	19.03	28.94	27.11	23.71	20.18
		KW	1.16	1.16	1.16	1.17	1.30	1.30	1.30	1.31	1.46	1.46	1.46	1.47	1.64	1.63	1.63	1.64	1.83	1.83	1.83	1.84	2.06	2.05	2.05	2.06
		Amps	4.37	4.37	4.36	4.40	4.99	4.99	4.98	5.03	5.69	5.68	5.67	5.72	6.44	6.44	6.43	6.47	7.28	7.28	7.26	7.31	8.27	8.26	8.25	8.30
		Hi PR	251	252	254	258	291	292	294	298	332	333	335	339	377	378	380	384	425	426	428	432	476	478	479	484
		Lo PR	123	125	128	133	131	132	136	141	137	139	142	147	143	145	148	153	148	150	153	158	155	157	160	165
	665	MBh	21.6	21.9	22.5	23.5	21.4	21.7	22.4	23.3	20.9	21.2	21.8	22.8	19.9	20.2	**20.9**	21.8	18.8	19.1	19.7	20.7	17.7	18.0	18.6	19.6
		S/T	1.00	0.88	0.74	0.59	1.00	0.89	0.74	0.60	1.00	0.91	0.77	0.62	1.00	1.00	**0.79**	0.64	1.00	1.00	0.81	0.67	1.00	1.00	0.87	0.72
		ΔT	26.67	24.85	21.44	17.91	26.62	24.80	21.39	17.86	26.88	25.05	21.65	18.12	26.60	24.78	**21.37**	17.84	26.36	24.54	21.13	17.60	27.50	25.68	22.27	18.74
		KW	1.17	1.17	1.17	1.18	1.31	1.31	1.31	1.32	1.47	1.47	1.47	1.48	1.65	1.64	**1.64**	1.65	1.84	1.84	1.83	1.85	2.06	2.06	2.06	2.07
		Amps	4.41	4.41	4.40	4.45	5.04	5.03	5.02	5.07	5.73	5.73	5.72	5.76	6.48	6.48	**6.47**	6.51	7.32	7.32	7.31	7.35	8.31	8.30	8.29	8.34
		Hi PR	254	255	257	261	293	295	296	301	335	336	338	342	380	381	**382**	387	428	429	431	435	479	480	482	486
		Lo PR	126	127	130	136	133	135	138	143	140	141	144	150	145	147	**150**	155	151	152	155	161	158	159	162	168
	840	MBh	22.4	22.7	23.3	24.3	22.2	22.5	23.1	24.1	21.7	22.0	22.6	23.6	20.7	21.0	21.6	22.6	19.5	19.8	20.5	21.4	18.5	18.8	19.4	20.4
		S/T	1.00	0.93	0.79	0.64	1.00	0.93	0.79	0.64	1.00	1.00	0.82	0.67	1.00	1.00	0.84	0.69	1.00	1.00	0.86	0.71	1.00	1.00	0.91	0.77
		ΔT	24.84	23.01	19.61	16.08	24.79	22.97	19.56	16.03	25.05	23.22	19.82	16.29	24.77	22.95	19.54	16.01	24.53	22.70	19.30	15.77	25.67	23.84	20.44	16.91
		KW	1.18	1.18	1.18	1.19	1.32	1.32	1.32	1.33	1.48	1.48	1.48	1.49	1.66	1.66	1.65	1.66	1.85	1.85	1.85	1.86	2.08	2.08	2.07	2.08
		Amps	4.47	4.46	4.45	4.50	5.09	5.09	5.07	5.12	5.78	5.78	5.77	5.82	6.54	6.53	6.52	6.57	7.38	7.37	7.36	7.41	8.36	8.36	8.35	8.39
		Hi PR	258	259	261	265	298	299	301	305	339	340	342	347	384	385	387	391	432	433	435	439	484	485	486	491
		Lo PR	130	132	135	140	138	139	142	148	144	146	149	154	150	151	155	160	155	157	160	165	162	164	167	172
85	560	MBh	21.6	21.9	22.6	23.5	21.4	21.7	22.4	23.3	20.9	21.2	21.8	22.8	19.9	20.2	20.9	21.8	18.8	19.1	19.7	20.7	17.7	18.0	18.6	19.6
		S/T	1.00	0.90	0.76	0.61	1.00	0.91	0.77	0.62	1.00	1.00	0.79	0.64	1.00	1.00	0.81	0.66	1.00	1.00	0.84	0.69	1.00	1.00	1.00	0.74
		ΔT	31.69	29.86	26.46	22.93	31.64	29.81	26.41	22.88	31.89	30.07	26.66	23.13	31.62	29.79	26.39	22.86	31.38	29.55	26.14	22.62	32.52	30.69	27.29	23.76
		KW	1.16	1.16	1.16	1.17	1.31	1.30	1.30	1.31	1.47	1.46	1.46	1.47	1.64	1.64	1.63	1.65	1.83	1.83	1.83	1.84	2.06	2.06	2.05	2.07
		Amps	4.38	4.38	4.37	4.42	5.01	5.00	4.99	5.04	5.70	5.70	5.69	5.73	6.45	6.45	6.44	6.48	7.29	7.29	7.28	7.32	8.28	8.27	8.26	8.31
		Hi PR	252	253	255	260	292	293	295	299	333	334	336	341	378	379	381	385	426	427	429	433	478	479	481	485
		Lo PR	125	127	130	135	133	134	137	143	139	141	144	149	145	146	150	155	150	152	155	160	157	159	162	167
	665	MBh	22.0	22.3	22.9	23.9	21.8	22.1	22.7	23.7	21.2	21.5	22.2	23.1	20.3	20.6	21.2	22.2	19.1	19.4	20.0	21.0	18.0	18.3	19.0	19.9
		S/T	1.00	0.98	0.84	0.69	1.00	1.00	0.85	0.70	1.00	1.00	0.88	0.73	1.00	1.00	0.90	0.75	1.00	1.00	0.92	0.77	1.00	1.00	1.00	0.82
		ΔT	30.25	28.43	25.02	21.49	30.20	28.38	24.97	21.44	30.46	28.64	25.23	21.70	30.19	28.36	24.95	21.43	29.94	28.12	24.71	21.18	31.08	29.26	25.85	22.32
		KW	1.17	1.17	1.17	1.18	1.32	1.31	1.31	1.32	1.48	1.47	1.47	1.48	1.65	1.65	1.64	1.66	1.84	1.84	1.84	1.85	2.07	2.07	2.06	2.07
		Amps	4.43	4.42	4.41	4.46	5.05	5.04	5.03	5.08	5.74	5.74	5.73	5.78	6.49	6.49	6.48	6.53	7.33	7.33	7.32	7.37	8.32	8.31	8.30	8.35
		Hi PR	255	256	258	262	295	296	297	302	336	337	339	343	381	382	384	388	429	430	432	436	480	481	483	488
		Lo PR	128	129	132	137	135	137	140	145	142	143	146	152	147	149	152	157	153	154	157	163	159	161	164	169
	840	MBh	22.8	23.1	23.7	24.7	22.6	22.9	23.5	24.5	22.0	22.3	22.9	23.9	21.1	21.4	22.0	23.0	19.9	20.2	20.8	21.8	18.8	19.1	19.8	20.7
		S/T	1.00	1.00	0.89	0.74	1.00	1.00	0.90	0.75	1.00	1.00	0.92	0.77	1.00	1.00	0.94	0.79	1.00	1.00	1.00	0.82	1.00	1.00	1.00	0.87
		ΔT	28.42	26.60	23.19	19.66	28.37	26.55	23.14	19.61	28.63	26.80	23.40	19.87	28.35	26.53	23.12	19.59	28.11	26.28	22.88	19.35	29.25	27.43	24.02	20.49
		KW	1.18	1.18	1.18	1.19	1.33	1.33	1.32	1.33	1.49	1.49	1.48	1.49	1.66	1.66	1.66	1.67	1.85	1.85	1.85	1.86	2.08	2.08	2.08	2.09
		Amps	4.48	4.48	4.46	4.51	5.10	5.10	5.09	5.13	5.80	5.79	5.78	5.83	6.55	6.54	6.53	6.58	7.39	7.38	7.37	7.42	8.37	8.37	8.36	8.40
		Hi PR	259	261	262	267	299	300	302	306	341	342	343	348	385	386	388	392	433	434	436	441	485	486	488	492
		Lo PR	132	134	137	142	140	141	144	150	146	148	151	156	152	153	156	162	157	159	162	167	164	166	169	174

IDB: Entering Indoor Dry Bulb Temperature

Shaded area reflects AHRI (TVA) conditions

kW = Total system power

High and low pressures are measured at the liquid and suction service valves.

Amps = outdoor unit amps (comp.+fan)

Expanded Cooling Data — GPGM530***41 Stage 2

			Outdoor Ambient Temperature																							
			65ºF				75ºF				85ºF				95ºF				105ºF				115ºF			
			Entering Indoor Wet Bulb Temperature																							
IDB	Airflow		59	63	67	71	59	63	67	71	59	63	67	71	59	63	67	71	59	63	67	71	59	63	67	71
70	800	MBh	29.4	29.8	30.7	-	29.1	29.6	30.4	-	28.4	28.8	29.7	-	27.1	27.5	28.4	-	25.4	25.8	26.7	-	24.0	24.4	25.3	-
		S/T	0.59	0.52	0.38	-	0.60	0.52	0.38	-	0.63	0.55	0.41	-	0.64	0.57	0.43	-	1.00	0.59	0.45	-	1.00	0.64	0.50	-
		ΔT	20.78	18.89	15.36	-	20.73	18.84	15.31	-	21.00	19.11	15.58	-	20.71	18.82	15.29	-	20.46	18.57	15.04	-	21.64	19.75	16.22	-
		KW	1.84	1.84	1.84	-	2.07	2.07	2.07	-	2.33	2.32	2.32	-	2.60	2.60	2.59	-	2.91	2.91	2.90	-	3.27	3.27	3.26	-
		Amps	6.95	6.95	6.93	-	7.94	7.93	7.92	-	9.05	9.04	9.02	-	10.24	10.23	10.22	-	11.58	11.57	11.55	-	13.14	13.13	13.12	-
		Hi PR	262	263	265	-	303	305	306	-	347	348	350	-	394	395	397	-	444	445	447	-	498	499	501	-
		Lo PR	119	121	124	-	127	128	131	-	133	135	138	-	139	140	143	-	144	145	148	-	151	152	155	-
	950	MBh	29.9	30.3	31.2	-	29.6	30.0	30.9	-	28.9	29.3	30.2	-	27.5	27.9	28.8	-	25.9	26.3	27.2	-	24.4	24.8	25.7	-
		S/T	0.68	0.60	0.46	-	0.68	0.60	0.47	-	0.71	0.63	0.49	-	0.73	0.65	0.51	-	1.00	0.67	0.53	-	1.00	0.72	0.59	-
		ΔT	19.30	17.41	13.88	-	19.25	17.36	13.83	-	19.51	17.62	14.09	-	19.23	17.34	13.81	-	18.98	17.08	13.56	-	20.16	18.27	14.74	-
		KW	1.86	1.86	1.85	-	2.09	2.09	2.08	-	2.34	2.34	2.34	-	2.62	2.61	2.61	-	2.92	2.92	2.92	-	3.28	3.28	3.28	-
		Amps	7.02	7.01	7.00	-	8.01	8.00	7.98	-	9.11	9.11	9.09	-	10.31	10.30	10.28	-	11.64	11.63	11.62	-	13.21	13.20	13.18	-
		Hi PR	265	266	268	-	306	307	309	-	350	351	353	-	396	398	399	-	447	448	450	-	501	502	504	-
		Lo PR	122	123	126	-	129	130	134	-	135	137	140	-	141	142	145	-	146	148	151	-	153	154	157	-
	1200	MBh	31.0	31.4	32.3	-	30.7	31.1	32.0	-	29.9	30.4	31.2	-	28.6	29.0	29.9	-	27.0	27.4	28.3	-	25.5	25.9	26.8	-
		S/T	0.72	0.64	0.51	-	0.73	0.65	0.51	-	0.75	0.68	0.54	-	1.00	0.70	0.56	-	1.00	0.72	0.58	-	1.00	0.77	0.63	-
		ΔT	17.40	15.51	11.98	-	17.35	15.46	11.93	-	17.61	15.72	12.19	-	17.33	15.44	11.91	-	17.08	15.19	11.66	-	18.26	16.37	12.84	-
		KW	1.88	1.88	1.87	-	2.11	2.10	2.10	-	2.36	2.36	2.35	-	2.64	2.63	2.63	-	2.94	2.94	2.94	-	3.30	3.30	3.30	-
		Amps	7.10	7.10	7.08	-	8.09	8.09	8.07	-	9.20	9.19	9.17	-	10.39	10.38	10.37	-	11.73	11.72	11.70	-	13.29	13.29	13.27	-
		Hi PR	269	271	272	-	311	312	314	-	354	355	357	-	401	402	404	-	451	453	454	-	505	506	508	-
		Lo PR	126	128	131	-	133	135	138	-	140	141	144	-	145	147	150	-	151	152	155	-	157	159	162	-
75	800	MBh	29.4	29.8	30.7	32.1	29.2	29.6	30.5	31.8	28.4	28.8	29.7	31.0	27.1	27.5	28.4	29.7	25.5	25.9	26.7	28.1	24.0	24.4	25.3	26.6
		S/T	0.72	0.65	0.51	0.36	0.73	0.65	0.52	0.37	1.00	0.68	0.54	0.40	1.00	0.70	0.56	0.42	1.00	0.72	0.58	0.44	1.00	0.77	0.64	0.49
		ΔT	24.94	23.05	19.52	15.86	24.89	23.00	19.47	15.81	25.15	23.26	19.73	16.08	24.87	22.98	19.45	15.79	24.62	22.73	19.20	15.54	25.80	23.91	20.38	16.72
		KW	1.84	1.84	1.84	1.85	2.07	2.07	2.06	2.08	2.32	2.32	2.32	2.34	2.60	2.60	2.59	2.61	2.91	2.90	2.90	2.92	3.27	3.26	3.26	3.28
		Amps	6.95	6.94	6.92	7.00	7.94	7.93	7.91	7.99	9.04	9.03	9.02	9.09	10.23	10.23	10.21	10.29	11.57	11.56	11.54	11.62	13.14	13.13	13.11	13.19
		Hi PR	262	263	265	270	304	305	307	311	347	348	350	355	394	395	397	401	444	445	447	452	498	499	501	505
		Lo PR	120	121	124	129	127	128	131	136	133	135	138	143	139	140	143	148	144	145	148	154	151	152	155	160
	950	MBh	29.9	30.3	31.2	32.6	29.6	30.1	30.9	32.3	28.9	29.3	30.2	31.5	27.5	**28.0**	28.8	30.2	25.9	26.3	27.2	28.6	24.5	24.9	25.7	27.1
		S/T	0.81	0.73	0.59	0.45	0.81	0.74	0.60	0.45	1.00	0.76	0.62	0.48	1.00	**0.78**	0.64	0.50	1.00	0.80	0.67	0.52	1.00	0.86	0.72	0.57
		ΔT	23.45	21.56	18.03	14.38	23.40	21.51	17.98	14.33	23.67	21.78	18.25	14.59	23.38	**21.49**	17.96	14.31	23.13	21.24	17.71	14.05	24.31	22.42	18.89	15.24
		KW	1.86	1.86	1.85	1.87	2.09	2.08	2.08	2.10	2.34	2.34	2.33	2.35	2.61	**2.61**	2.61	2.63	2.92	2.92	2.92	2.93	3.28	3.28	3.28	3.29
		Amps	7.01	7.01	6.99	7.06	8.00	7.99	7.98	8.05	9.11	9.10	9.08	9.16	10.30	**10.29**	10.28	10.35	11.64	11.63	11.61	11.69	13.20	13.19	13.18	13.25
		Hi PR	265	266	268	273	306	308	309	314	350	351	353	357	397	**398**	400	404	447	448	450	455	501	502	504	508
		Lo PR	122	123	126	131	129	131	134	139	135	137	140	145	141	**142**	145	150	146	148	151	156	153	154	157	162
	1200	MBh	31.0	31.4	32.3	33.6	30.7	31.2	32.0	33.4	30.0	30.4	31.3	32.6	28.6	29.1	29.9	31.3	27.0	27.4	28.3	29.7	25.5	26.0	26.8	28.2
		S/T	0.85	0.77	0.64	0.49	1.00	0.78	0.64	0.50	1.00	0.81	0.67	0.52	1.00	0.83	0.69	0.54	1.00	0.85	0.71	0.57	1.00	1.00	0.76	0.62
		ΔT	21.56	19.67	16.14	12.48	21.50	19.61	16.08	12.43	21.77	19.88	16.35	12.69	21.48	19.59	16.06	12.41	21.23	19.34	15.81	12.16	22.42	20.52	17.00	13.34
		KW	1.88	1.88	1.87	1.89	2.11	2.10	2.10	2.12	2.36	2.36	2.35	2.37	2.63	2.63	2.63	2.65	2.94	2.94	2.94	2.95	3.30	3.30	3.30	3.31
		Amps	7.10	7.09	7.07	7.15	8.09	8.08	8.06	8.14	9.19	9.18	9.17	9.24	10.39	10.38	10.36	10.44	11.72	11.71	11.70	11.77	13.29	13.28	13.26	13.34
		Hi PR	270	271	273	277	311	312	314	319	354	356	357	362	401	402	404	409	452	453	455	459	505	507	508	513
		Lo PR	126	128	131	136	133	135	138	143	140	141	144	150	145	147	150	155	151	152	155	160	157	159	162	167

IDB: Entering Indoor Dry Bulb Temperature

High and low pressures are measured at the liquid and suction service valves.

Shaded area reflects ACCA (TVA) conditions

kW = Total system power

Amps = outdoor unit amps (comp.+fan)

Expanded Cooling Data — GPGM530***41 Stage 2 (cont.)

			Outdoor Ambient Temperature																							
			65ºF				75ºF				85ºF				95ºF				105ºF				115ºF			
			Entering Indoor Wet Bulb Temperature																							
IDB	Airflow		59	63	67	71	59	63	67	71	59	63	67	71	59	63	67	71	59	63	67	71	59	63	67	71
80	800	MBh	29.6	30.0	30.9	32.2	29.3	29.7	30.6	32.0	28.5	29.0	29.8	31.2	27.2	27.6	28.5	29.9	25.6	26.0	26.9	28.2	24.1	24.5	25.4	26.8
		S/T	0.85	0.77	0.64	0.49	1.00	0.78	0.64	0.50	1.00	0.81	0.67	0.52	1.00	0.83	0.69	0.54	1.00	1.00	0.71	0.57	1.00	1.00	0.76	0.62
		ΔT	29.13	27.23	23.71	20.05	29.07	27.18	23.65	20.00	29.34	27.45	23.92	20.26	29.05	27.16	23.63	19.98	28.80	26.91	23.38	19.72	29.99	28.09	24.57	20.91
		KW	1.84	1.84	1.84	1.86	2.07	2.07	2.07	2.08	2.33	2.32	2.32	2.34	2.60	2.60	2.59	2.61	2.91	2.91	2.90	2.92	3.27	3.27	3.26	3.28
		Amps	6.95	6.94	6.93	7.00	7.94	7.93	7.92	7.99	9.05	9.04	9.02	9.10	10.24	10.23	10.22	10.29	11.57	11.57	11.55	11.63	13.14	13.13	13.12	13.19
		Hi PR	263	264	266	270	304	305	307	312	348	349	350	355	394	395	397	402	445	446	448	452	498	500	501	506
		Lo PR	120	122	125	130	127	129	132	137	134	135	138	143	139	141	144	149	144	146	149	154	151	153	156	161
	950	MBh	30.1	30.5	31.4	32.7	29.8	30.2	31.1	32.4	29.0	29.4	30.3	31.7	27.7	28.1	**29.0**	30.3	26.1	26.5	27.4	28.7	24.6	25.0	25.9	27.2
		S/T	0.93	0.86	0.72	0.57	1.00	0.86	0.73	0.58	1.00	0.89	0.75	0.61	1.00	0.91	**0.77**	0.63	1.00	1.00	0.79	0.65	1.00	1.00	0.84	0.70
		ΔT	27.64	25.75	22.22	18.56	27.59	25.70	22.17	18.51	27.85	25.96	22.43	18.78	27.57	25.68	**22.15**	18.49	27.32	25.43	21.90	18.24	28.50	26.61	23.08	19.42
		KW	1.86	1.86	1.85	1.87	2.09	2.09	2.08	2.10	2.34	2.34	2.34	2.35	2.62	2.61	**2.61**	2.63	2.92	2.92	2.92	2.93	3.28	3.28	3.28	3.29
		Amps	7.02	7.01	6.99	7.07	8.01	8.00	7.98	8.06	9.11	9.10	9.09	9.16	10.31	10.30	**10.28**	10.36	11.64	11.63	11.62	11.69	13.21	13.20	13.18	13.26
		Hi PR	266	267	268	273	307	308	310	315	350	351	353	358	397	398	**400**	405	447	449	450	455	501	502	504	509
		Lo PR	122	124	127	132	130	131	134	139	136	137	140	146	141	143	**146**	151	147	148	151	156	153	155	158	163
	1200	MBh	31.2	31.6	32.4	33.8	30.9	31.3	32.2	33.5	30.1	30.5	31.4	32.8	28.8	29.2	30.1	31.4	27.2	27.6	28.5	29.8	25.7	26.1	27.0	28.3
		S/T	1.00	0.90	0.76	0.62	1.00	0.91	0.77	0.63	1.00	0.93	0.80	0.65	1.00	1.00	0.82	0.67	1.00	1.00	0.84	0.69	1.00	1.00	0.89	0.75
		ΔT	25.74	23.85	20.32	16.66	25.69	23.80	20.27	16.61	25.95	24.06	20.53	16.88	25.67	23.78	20.25	16.59	25.42	23.53	20.00	16.34	26.60	24.71	21.18	17.52
		KW	1.88	1.88	1.87	1.89	2.11	2.10	2.10	2.12	2.36	2.36	2.35	2.37	2.63	2.63	2.63	2.65	2.94	2.94	2.94	2.95	3.30	3.30	3.30	3.31
		Amps	7.10	7.10	7.08	7.15	8.09	8.08	8.07	8.14	9.20	9.19	9.17	9.25	10.39	10.38	10.37	10.44	11.73	11.72	11.70	11.78	13.29	13.28	13.27	13.34
		Hi PR	270	271	273	278	312	313	315	319	355	356	358	363	402	403	405	409	452	453	455	460	506	507	509	513
		Lo PR	127	128	131	136	134	135	139	144	140	142	145	150	146	147	150	155	151	153	156	161	158	159	162	167
85	800	MBh	30.1	30.5	31.4	32.7	29.8	30.2	31.1	32.5	29.0	29.5	30.3	31.7	27.7	28.1	29.0	30.4	26.1	26.5	27.4	28.7	24.6	25.0	25.9	27.3
		S/T	1.00	0.88	0.74	0.59	1.00	0.88	0.75	0.60	1.00	1.00	0.77	0.63	1.00	1.00	0.79	0.65	1.00	1.00	0.81	0.67	1.00	1.00	0.87	0.72
		ΔT	32.84	30.95	27.42	23.76	32.78	30.89	27.36	23.71	33.05	31.16	27.63	23.97	32.77	30.88	27.35	23.69	32.51	30.62	27.09	23.44	33.70	31.81	28.28	24.62
		KW	1.85	1.85	1.84	1.86	2.08	2.07	2.07	2.09	2.33	2.33	2.32	2.34	2.60	2.60	2.60	2.62	2.91	2.91	2.91	2.92	3.27	3.27	3.27	3.28
		Amps	6.97	6.96	6.95	7.02	7.96	7.95	7.94	8.01	9.06	9.06	9.04	9.11	10.26	10.25	10.23	10.31	11.59	11.59	11.57	11.64	13.16	13.15	13.13	13.21
		Hi PR	264	265	267	271	305	306	308	313	349	350	352	356	395	397	398	403	446	447	449	453	500	501	503	507
		Lo PR	122	123	126	131	129	131	134	139	136	137	140	145	141	142	145	151	146	148	151	156	153	154	157	163
	950	MBh	30.6	31.0	31.9	33.2	30.3	30.7	31.6	32.9	29.5	29.9	30.8	32.2	28.2	28.6	29.5	30.8	26.6	27.0	27.9	29.2	25.1	25.5	26.4	27.7
		S/T	1.00	0.96	0.82	0.68	1.00	0.97	0.83	0.68	1.00	1.00	0.85	0.71	1.00	1.00	0.87	0.73	1.00	1.00	0.90	0.75	1.00	1.00	1.00	0.80
		ΔT	31.35	29.46	25.93	22.27	31.30	29.41	25.88	22.22	31.56	29.67	26.14	22.49	31.28	29.39	25.86	22.20	31.03	29.14	25.61	21.95	32.21	30.32	26.79	23.13
		KW	1.86	1.86	1.86	1.88	2.09	2.09	2.09	2.10	2.35	2.34	2.34	2.36	2.62	2.62	2.61	2.63	2.93	2.93	2.92	2.94	3.29	3.29	3.28	3.30
		Amps	7.04	7.03	7.01	7.09	8.03	8.02	8.00	8.08	9.13	9.12	9.11	9.18	10.33	10.32	10.30	10.38	11.66	11.65	11.64	11.71	13.23	13.22	13.20	13.28
		Hi PR	267	268	270	274	308	309	311	316	352	353	355	359	398	399	401	406	449	450	452	456	502	504	505	510
		Lo PR	124	126	129	134	131	133	136	141	138	139	142	147	143	145	148	153	148	150	153	158	155	157	160	165
	1200	MBh	31.6	32.1	32.9	34.3	31.4	31.8	32.7	34.0	30.6	31.0	31.9	33.3	29.3	29.7	30.6	31.9	27.7	28.1	29.0	30.3	26.2	26.6	27.5	28.8
		S/T	1.00	1.00	0.87	0.72	1.00	1.00	0.87	0.73	1.00	1.00	0.90	0.75	1.00	1.00	0.92	0.77	1.00	1.00	0.94	0.80	1.00	1.00	1.00	0.85
		ΔT	29.45	27.56	24.03	20.37	29.40	27.51	23.98	20.32	29.67	27.78	24.25	20.59	29.38	27.49	23.96	20.30	29.13	27.24	23.71	20.05	30.31	28.42	24.89	21.23
		KW	1.88	1.88	1.88	1.89	2.11	2.11	2.10	2.12	2.36	2.36	2.36	2.38	2.64	2.64	2.63	2.65	2.95	2.94	2.94	2.96	3.31	3.30	3.30	3.32
		Amps	7.12	7.11	7.10	7.17	8.11	8.10	8.09	8.16	9.22	9.21	9.19	9.27	10.41	10.40	10.39	10.46	11.74	11.74	11.72	11.80	13.31	13.30	13.29	13.36
		Hi PR	271	273	274	279	313	314	316	320	356	357	359	364	403	404	406	411	453	454	456	461	507	508	510	515
		Lo PR	128	130	133	138	136	137	140	145	142	144	147	152	148	149	152	157	153	154	157	163	160	161	164	169

IDB: Entering Indoor Dry Bulb Temperature

Shaded area reflects AHRI (TVA) conditions

kW = Total system power

High and low pressures are measured at the liquid and suction service valves.

Amps = outdoor unit amps (comp.+fan)

Expanded Cooling Data — GPGM536***41 Stage 1

			Outdoor Ambient Temperature																							
			65ºF				75ºF				85ºF				95ºF				105ºF				115ºF			
			Entering Indoor Wet Bulb Temperature																							
IDB	Airflow		59	63	67	71	59	63	67	71	59	63	67	71	59	63	67	71	59	63	67	71	59	63	67	71
70	735	MBh	25.6	26.0	26.7	-	25.4	25.7	26.5	-	24.7	25.1	25.8	-	23.6	23.9	24.7	-	22.1	22.5	23.3	-	20.9	21.2	22.0	-
		S/T	0.66	0.57	0.43	-	0.66	0.58	0.43	-	1.00	0.61	0.46	-	1.00	0.63	0.48	-	1.00	0.65	0.51	-	1.00	1.00	0.56	-
		ΔT	19.54	17.74	14.36	-	19.49	17.69	14.31	-	19.75	17.94	14.57	-	19.47	17.67	14.29	-	19.23	17.43	14.05	-	20.36	18.56	15.18	-
		KW	1.44	1.44	1.44	-	1.60	1.60	1.60	-	1.78	1.78	1.78	-	1.98	1.97	1.97	-	2.19	2.19	2.19	-	2.45	2.45	2.45	-
		Amps	5.07	5.06	5.05	-	5.77	5.77	5.75	-	6.55	6.55	6.54	-	7.40	7.40	7.38	-	8.35	8.34	8.33	-	9.46	9.45	9.44	-
		Hi PR	245	246	248	-	284	285	287	-	324	325	327	-	368	369	371	-	415	416	418	-	465	466	468	-
		Lo PR	130	131	134	-	137	139	142	-	144	146	149	-	150	152	155	-	156	157	161	-	163	165	168	-
	840	MBh	25.9	26.3	27.1	-	25.7	26.1	26.8	-	25.0	25.4	26.2	-	23.9	24.3	25.0	-	22.5	22.8	23.6	-	21.2	21.6	22.3	-
		S/T	0.72	0.64	0.49	-	0.73	0.65	0.50	-	1.00	0.67	0.53	-	1.00	0.69	0.55	-	1.00	0.72	0.57	-	1.00	1.00	0.63	-
		ΔT	18.45	16.64	13.27	-	18.40	16.59	13.22	-	18.66	16.85	13.47	-	18.38	16.58	13.20	-	18.14	16.33	12.96	-	19.27	17.47	14.09	-
		KW	1.45	1.45	1.44	-	1.61	1.61	1.61	-	1.79	1.79	1.79	-	1.98	1.98	1.98	-	2.20	2.20	2.20	-	2.46	2.46	2.45	-
		Amps	5.11	5.10	5.09	-	5.81	5.80	5.79	-	6.59	6.59	6.57	-	7.44	7.43	7.42	-	8.39	8.38	8.37	-	9.50	9.49	9.48	-
		Hi PR	247	248	250	-	286	287	289	-	326	327	329	-	370	371	373	-	417	418	420	-	467	468	470	-
		Lo PR	131	133	136	-	139	141	144	-	146	148	151	-	152	154	157	-	158	159	163	-	165	167	170	-
	945	MBh	26.3	26.7	27.5	-	26.1	26.5	27.2	-	25.4	25.8	26.6	-	24.3	24.7	25.4	-	22.9	23.3	24.0	-	21.6	22.0	22.7	-
		S/T	0.76	0.67	0.53	-	0.76	0.68	0.53	-	1.00	0.71	0.56	-	1.00	0.73	0.58	-	1.00	0.75	0.61	-	1.00	1.00	0.66	-
		ΔT	17.53	15.72	12.35	-	17.48	15.67	12.30	-	17.74	15.93	12.55	-	17.46	15.66	12.28	-	17.22	15.41	12.04	-	18.35	16.55	13.17	-
		KW	1.46	1.45	1.45	-	1.62	1.62	1.61	-	1.80	1.80	1.79	-	1.99	1.99	1.99	-	2.21	2.21	2.21	-	2.46	2.46	2.46	-
		Amps	5.14	5.13	5.12	-	5.84	5.83	5.82	-	6.62	6.62	6.60	-	7.47	7.46	7.45	-	8.42	8.41	8.40	-	9.53	9.52	9.51	-
		Hi PR	249	250	252	-	288	289	291	-	328	329	331	-	372	373	375	-	419	420	422	-	469	470	472	-
		Lo PR	134	135	138	-	141	143	146	-	148	150	153	-	154	156	159	-	160	162	165	-	167	169	172	-
75	735	MBh	25.6	26.0	26.7	27.9	25.4	25.7	26.5	27.7	24.7	25.1	25.8	27.0	23.6	23.9	24.7	25.9	22.2	22.5	23.3	24.5	20.9	21.2	22.0	23.2
		S/T	0.80	0.71	0.57	0.41	1.00	0.72	0.57	0.42	1.00	0.75	0.60	0.45	1.00	0.77	0.62	0.47	1.00	1.00	0.65	0.49	1.00	1.00	0.70	0.55
		ΔT	23.52	21.71	18.33	14.84	23.47	21.66	18.29	14.79	23.72	21.91	18.54	15.04	23.45	21.64	18.27	14.77	23.21	21.40	18.03	14.53	24.34	22.53	19.16	15.66
		KW	1.44	1.44	1.43	1.45	1.60	1.60	1.60	1.61	1.78	1.78	1.78	1.79	1.97	1.97	1.97	1.98	2.19	2.19	2.19	2.20	2.45	2.45	2.44	2.46
		Amps	5.07	5.06	5.05	5.10	5.77	5.76	5.75	5.80	6.55	6.54	6.53	6.59	7.40	7.39	7.38	7.43	8.34	8.34	8.33	8.38	9.45	9.45	9.44	9.49
		Hi PR	245	246	248	252	284	285	287	291	325	326	327	332	368	369	371	375	415	416	418	422	465	466	468	472
		Lo PR	130	131	134	140	137	139	142	148	144	146	149	155	150	152	155	161	156	158	161	166	163	165	168	174
	840	MBh	26.0	26.3	27.1	28.2	25.7	26.1	26.9	28.0	25.1	25.4	26.2	27.4	23.9	**24.3**	25.0	26.2	22.5	22.9	23.6	24.8	21.2	21.6	22.3	23.5
		S/T	0.86	0.78	0.63	0.48	1.00	0.78	0.64	0.48	1.00	0.81	0.67	0.51	1.00	**0.83**	0.69	0.53	1.00	1.00	0.71	0.56	1.00	1.00	0.77	0.61
		ΔT	22.42	20.62	17.24	13.75	22.38	20.57	17.19	13.70	22.63	20.82	17.45	13.95	22.36	**20.55**	17.17	13.68	22.12	20.31	16.93	13.44	23.25	21.44	18.06	14.57
		KW	1.45	1.45	1.44	1.46	1.61	1.61	1.60	1.62	1.79	1.79	1.78	1.80	1.98	**1.98**	1.98	1.99	2.20	2.20	2.20	2.21	2.46	2.46	2.45	2.46
		Amps	5.10	5.10	5.08	5.14	5.80	5.80	5.79	5.84	6.59	6.58	6.57	6.62	7.43	**7.43**	7.42	7.47	8.38	8.37	8.36	8.42	9.49	9.49	9.47	9.53
		Hi PR	247	248	250	254	286	287	289	293	327	328	329	334	370	**371**	373	377	417	418	420	424	467	469	470	475
		Lo PR	131	133	136	142	139	141	144	150	146	148	151	157	152	**154**	157	163	158	159	163	168	165	167	170	175
	945	MBh	26.4	26.7	27.5	28.7	26.1	26.5	27.3	28.4	25.5	25.8	26.6	27.8	24.3	24.7	25.4	26.6	22.9	23.3	24.0	25.2	21.6	22.0	22.7	23.9
		S/T	1.00	0.81	0.67	0.51	1.00	0.82	0.67	0.52	1.00	0.85	0.70	0.55	1.00	1.00	0.72	0.57	1.00	1.00	0.75	0.59	1.00	1.00	0.80	0.65
		ΔT	21.51	19.70	16.32	12.83	21.46	19.65	16.27	12.78	21.71	19.90	16.53	13.03	21.44	19.63	16.26	12.76	21.20	19.39	16.01	12.52	22.33	20.52	17.15	13.65
		KW	1.45	1.45	1.45	1.46	1.62	1.61	1.61	1.62	1.80	1.79	1.79	1.80	1.99	1.99	1.99	2.00	2.21	2.21	2.20	2.22	2.46	2.46	2.46	2.47
		Amps	5.13	5.13	5.11	5.17	5.83	5.83	5.82	5.87	6.62	6.61	6.60	6.65	7.46	7.46	7.45	7.50	8.41	8.41	8.39	8.45	9.52	9.52	9.50	9.56
		Hi PR	249	250	252	256	288	289	291	295	329	330	331	336	372	373	375	379	419	420	422	426	469	471	472	477
		Lo PR	134	135	138	144	141	143	146	152	148	150	153	159	154	156	159	165	160	162	165	170	167	169	172	178

IDB: Entering Indoor Dry Bulb Temperature

High and low pressures are measured at the liquid and suction service valves.

Shaded area reflects ACCA (TVA) conditions

kW = Total system power

Amps = outdoor unit amps (comp.+fan)

Expanded Cooling Data — GPGM536***41 Stage 1 (cont.)

			Outdoor Ambient Temperature																							
			65ºF				75ºF				85ºF				95ºF				105ºF				115ºF			
			Entering Indoor Wet Bulb Temperature																							
IDB	Airflow		59	63	67	71	59	63	67	71	59	63	67	71	59	63	67	71	59	63	67	71	59	63	67	71
80	735	MBh	25.8	26.1	26.9	28.0	25.5	25.9	26.6	27.8	24.9	25.2	26.0	27.1	23.7	24.1	24.8	26.0	22.3	22.7	23.4	24.6	21.0	21.4	22.1	23.3
		S/T	1.00	0.85	0.70	0.55	1.00	0.86	0.71	0.55	1.00	1.00	0.74	0.58	1.00	1.00	0.76	0.60	1.00	1.00	0.78	0.63	1.00	1.00	1.00	0.68
		ΔT	27.52	25.71	22.34	18.84	27.47	25.66	22.29	18.79	27.72	25.91	22.54	19.04	27.45	25.64	22.27	18.77	27.21	25.40	22.03	18.53	28.34	26.53	23.16	19.66
		KW	1.44	1.44	1.44	1.45	1.60	1.60	1.60	1.61	1.78	1.78	1.78	1.79	1.98	1.97	1.97	1.98	2.19	2.19	2.19	2.20	2.45	2.45	2.45	2.46
		Amps	5.07	5.06	5.05	5.11	5.77	5.77	5.75	5.81	6.55	6.55	6.54	6.59	7.40	7.40	7.38	7.44	8.35	8.34	8.33	8.38	9.46	9.45	9.44	9.49
		Hi PR	246	247	249	253	284	286	287	291	325	326	328	332	369	370	371	376	416	417	418	423	466	467	469	473
		Lo PR	130	132	135	141	138	140	143	148	145	147	150	155	151	152	156	161	156	158	161	167	164	165	169	174
	840	MBh	26.1	26.4	27.2	28.4	25.9	26.2	27.0	28.2	25.2	25.6	26.3	27.5	24.0	24.4	**25.2**	26.3	22.6	23.0	23.8	24.9	21.3	21.7	22.5	23.6
		S/T	1.00	0.91	0.77	0.61	1.00	0.92	0.77	0.62	1.00	1.00	0.80	0.65	1.00	1.00	**0.82**	0.67	1.00	1.00	0.85	0.69	1.00	1.00	1.00	0.75
		ΔT	26.43	24.62	21.24	17.75	26.38	24.57	21.19	17.70	26.63	24.82	21.45	17.95	26.36	24.55	**21.18**	17.68	26.12	24.31	20.93	17.44	27.25	25.44	22.07	18.57
		KW	1.45	1.45	1.44	1.46	1.61	1.61	1.61	1.62	1.79	1.79	1.79	1.80	1.98	1.98	**1.98**	1.99	2.20	2.20	2.20	2.21	2.46	2.46	2.45	2.47
		Amps	5.11	5.10	5.09	5.14	5.81	5.80	5.79	5.84	6.59	6.58	6.57	6.63	7.44	7.43	**7.42**	7.47	8.38	8.38	8.37	8.42	9.49	9.49	9.48	9.53
		Hi PR	248	249	251	255	287	288	289	294	327	328	330	334	371	372	**373**	378	418	419	420	425	468	469	471	475
		Lo PR	132	134	137	142	140	142	145	150	147	148	152	157	153	154	**158**	163	158	160	163	169	166	167	170	176
	945	MBh	26.5	26.9	27.6	28.8	26.3	26.6	27.4	28.6	25.6	26.0	26.7	27.9	24.4	24.8	25.6	26.7	23.0	23.4	24.2	25.3	21.8	22.1	22.9	24.0
		S/T	1.00	0.95	0.80	0.65	1.00	0.96	0.81	0.66	1.00	1.00	0.84	0.68	1.00	1.00	0.86	0.70	1.00	1.00	0.88	0.73	1.00	1.00	1.00	0.78
		ΔT	25.51	23.70	20.32	16.83	25.46	23.65	20.27	16.78	25.71	23.90	20.53	17.03	25.44	23.63	20.26	16.76	25.20	23.39	20.01	16.52	26.33	24.52	21.15	17.65
		KW	1.45	1.45	1.45	1.46	1.62	1.61	1.61	1.62	1.80	1.80	1.79	1.80	1.99	1.99	1.99	2.00	2.21	2.21	2.20	2.22	2.46	2.46	2.46	2.47
		Amps	5.14	5.13	5.12	5.17	5.84	5.83	5.82	5.87	6.62	6.61	6.60	6.66	7.47	7.46	7.45	7.50	8.41	8.41	8.40	8.45	9.53	9.52	9.51	9.56
		Hi PR	250	251	253	257	289	290	291	296	329	330	332	336	373	374	375	380	420	421	423	427	470	471	473	477
		Lo PR	134	136	139	145	142	144	147	152	149	151	154	159	155	156	160	165	161	162	165	171	168	169	173	178
85	735	MBh	26.2	26.5	27.3	28.5	26.0	26.3	27.1	28.2	25.3	25.6	26.4	27.6	24.1	24.5	25.3	26.4	22.7	23.1	23.9	25.0	21.4	21.8	22.6	23.7
		S/T	1.00	0.96	0.81	0.66	1.00	1.00	0.82	0.66	1.00	1.00	0.85	0.69	1.00	1.00	0.87	0.71	1.00	1.00	1.00	0.74	1.00	1.00	1.00	0.79
		ΔT	31.07	29.26	25.88	22.39	31.02	29.21	25.83	22.34	31.27	29.46	26.09	22.59	31.00	29.19	25.82	22.32	30.76	28.95	25.57	22.08	31.89	30.08	26.71	23.21
		KW	1.44	1.44	1.44	1.45	1.60	1.60	1.60	1.61	1.78	1.78	1.78	1.79	1.98	1.98	1.97	1.99	2.20	2.20	2.19	2.21	2.45	2.45	2.45	2.46
		Amps	5.08	5.08	5.06	5.12	5.78	5.78	5.77	5.82	6.57	6.56	6.55	6.60	7.41	7.41	7.40	7.45	8.36	8.36	8.34	8.40	9.47	9.47	9.45	9.51
		Hi PR	247	248	250	254	286	287	288	293	326	327	329	333	370	371	373	377	417	418	420	424	467	468	470	474
		Lo PR	132	134	137	143	140	142	145	150	147	148	152	157	153	154	158	163	158	160	163	169	166	167	171	176
	840	MBh	26.5	26.9	27.6	28.8	26.3	26.7	27.4	28.6	25.6	26.0	26.7	27.9	24.5	24.8	25.6	26.8	23.1	23.4	24.2	25.4	21.8	22.1	22.9	24.1
		S/T	1.00	1.00	0.88	0.72	1.00	1.00	0.88	0.73	1.00	1.00	0.91	0.76	1.00	1.00	1.00	0.78	1.00	1.00	1.00	0.80	1.00	1.00	1.00	0.86
		ΔT	29.97	28.17	24.79	21.30	29.92	28.12	24.74	21.25	30.18	28.37	25.00	21.50	29.91	28.10	24.72	21.23	29.66	27.86	24.48	20.99	30.80	28.99	25.61	22.12
		KW	1.45	1.45	1.45	1.46	1.61	1.61	1.61	1.62	1.79	1.79	1.79	1.80	1.99	1.99	1.98	2.00	2.21	2.20	2.20	2.21	2.46	2.46	2.46	2.47
		Amps	5.12	5.11	5.10	5.16	5.82	5.81	5.80	5.86	6.60	6.60	6.59	6.64	7.45	7.45	7.43	7.49	8.40	8.39	8.38	8.43	9.51	9.50	9.49	9.54
		Hi PR	249	250	252	256	288	289	290	295	328	329	331	335	372	373	375	379	419	420	422	426	469	470	472	476
		Lo PR	134	136	139	144	142	143	147	152	149	150	154	159	155	156	160	165	160	162	165	171	168	169	172	178
	945	MBh	26.9	27.3	28.0	29.2	26.7	27.1	27.8	29.0	26.0	26.4	27.2	28.3	24.9	25.2	26.0	27.2	23.5	23.8	24.6	25.8	22.2	22.5	23.3	24.5
		S/T	1.00	1.00	0.91	0.76	1.00	1.00	0.92	0.77	1.00	1.00	0.95	0.79	1.00	1.00	1.00	0.81	1.00	1.00	1.00	0.84	1.00	1.00	1.00	0.89
		ΔT	29.05	27.25	23.87	20.38	29.01	27.20	23.82	20.33	29.26	27.45	24.08	20.58	28.99	27.18	23.80	20.31	28.75	26.94	23.56	20.07	29.88	28.07	24.69	21.20
		KW	1.46	1.46	1.45	1.47	1.62	1.62	1.62	1.63	1.80	1.80	1.80	1.81	1.99	1.99	1.99	2.00	2.21	2.21	2.21	2.22	2.47	2.47	2.46	2.48
		Amps	5.15	5.14	5.13	5.19	5.85	5.85	5.83	5.89	6.63	6.63	6.62	6.67	7.48	7.48	7.46	7.52	8.43	8.42	8.41	8.46	9.54	9.53	9.52	9.58
		Hi PR	251	252	254	258	290	291	292	297	330	331	333	337	374	375	377	381	421	422	424	428	471	472	474	478
		Lo PR	136	138	141	147	144	146	149	154	151	152	156	161	157	158	162	167	162	164	167	173	170	171	175	180

IDB: Entering Indoor Dry Bulb Temperature

Shaded area reflects AHRI (TVA) conditions

kW = Total system power

High and low pressures are measured at the liquid and suction service valves.

Amps = outdoor unit amps (comp.+fan)

Expanded Cooling Data — GPGM536***41 Stage 2

			Outdoor Ambient Temperature																							
			65ºF				75ºF				85ºF				95ºF				105ºF				115ºF			
			Entering Indoor Wet Bulb Temperature																							
IDB	Airflow		59	63	67	71	59	63	67	71	59	63	67	71	59	63	67	71	59	63	67	71	59	63	67	71
70	1050	MBh	35.6	36.1	37.2	-	35.3	35.8	36.9	-	34.4	34.9	35.9	-	32.8	33.3	34.3	-	30.8	31.3	32.4	-	29.0	29.5	30.6	-
		S/T	0.64	0.56	0.42	-	0.65	0.56	0.42	-	0.67	0.59	0.45	-	1.00	0.61	0.47	-	1.00	0.64	0.49	-	1.00	0.69	0.55	-
		ΔT	20.25	18.38	14.88	-	20.20	18.33	14.83	-	20.46	18.59	15.09	-	20.18	18.31	14.81	-	19.93	18.06	14.56	-	21.10	19.23	15.73	-
		KW	2.29	2.29	2.28	-	2.55	2.54	2.54	-	2.83	2.83	2.83	-	3.14	3.14	3.14	-	3.49	3.49	3.48	-	3.89	3.89	3.89	-
		Amps	8.06	8.05	8.03	-	9.18	9.17	9.15	-	10.42	10.41	10.39	-	11.77	11.76	11.74	-	13.27	13.26	13.25	-	15.04	15.03	15.01	-
		Hi PR	256	257	259	-	297	298	300	-	339	340	342	-	385	386	388	-	434	435	437	-	487	488	489	-
		Lo PR	126	128	131	-	134	135	138	-	140	142	145	-	146	148	151	-	152	153	156	-	159	160	163	-
	1200	MBh	36.1	36.6	37.6	-	35.8	36.3	37.3	-	34.8	35.3	36.4	-	33.2	33.7	34.8	-	31.3	31.8	32.8	-	29.5	30.0	31.1	-
		S/T	0.70	0.62	0.48	-	0.71	0.63	0.49	-	0.73	0.65	0.51	-	1.00	0.67	0.53	-	1.00	0.70	0.56	-	1.00	0.75	0.61	-
		ΔT	19.12	17.25	13.75	-	19.07	17.20	13.70	-	19.33	17.46	13.96	-	19.05	17.18	13.68	-	18.80	16.93	13.43	-	19.97	18.10	14.60	-
		KW	2.30	2.30	2.30	-	2.56	2.56	2.55	-	2.85	2.84	2.84	-	3.15	3.15	3.15	-	3.50	3.50	3.49	-	3.91	3.91	3.90	-
		Amps	8.12	8.11	8.09	-	9.23	9.22	9.21	-	10.48	10.47	10.45	-	11.83	11.82	11.80	-	13.33	13.32	13.30	-	15.10	15.09	15.07	-
		Hi PR	259	260	261	-	299	300	302	-	341	343	344	-	387	388	390	-	436	437	439	-	489	490	492	-
		Lo PR	128	129	133	-	136	137	140	-	142	144	147	-	148	149	153	-	153	155	158	-	160	162	165	-
	1350	MBh	36.6	37.1	38.2	-	36.3	36.8	37.9	-	35.4	35.9	37.0	-	33.8	34.3	35.4	-	31.8	32.3	33.4	-	30.0	30.6	31.6	-
		S/T	0.74	0.66	0.51	-	0.74	0.66	0.52	-	1.00	0.69	0.55	-	1.00	0.71	0.57	-	1.00	0.73	0.59	-	1.00	1.00	0.65	-
		ΔT	18.17	16.29	12.80	-	18.12	16.24	12.75	-	18.38	16.51	13.01	-	18.10	16.22	12.73	-	17.85	15.97	12.48	-	19.02	17.15	13.65	-
		KW	2.31	2.31	2.31	-	2.57	2.57	2.56	-	2.86	2.85	2.85	-	3.17	3.16	3.16	-	3.51	3.51	3.51	-	3.92	3.92	3.91	-
		Amps	8.17	8.16	8.14	-	9.28	9.27	9.25	-	10.53	10.52	10.50	-	11.87	11.87	11.85	-	13.38	13.37	13.35	-	15.15	15.14	15.12	-
		Hi PR	261	262	264	-	301	302	304	-	344	345	346	-	389	390	392	-	438	439	441	-	491	492	494	-
		Lo PR	130	131	135	-	138	139	142	-	144	146	149	-	150	152	155	-	156	157	160	-	163	164	167	-
75	1050	MBh	35.6	36.1	37.2	38.8	35.3	35.8	36.9	38.5	34.4	34.9	35.9	37.6	32.8	33.3	34.3	36.0	30.8	31.3	32.4	34.0	29.0	29.5	30.6	32.2
		S/T	0.77	0.69	0.55	0.40	1.00	0.70	0.56	0.41	1.00	0.73	0.58	0.43	1.00	0.75	0.60	0.45	1.00	0.77	0.63	0.48	1.00	1.00	0.68	0.53
		ΔT	24.37	22.50	19.00	15.38	24.32	22.45	18.95	15.33	24.58	22.71	19.21	15.59	24.30	22.43	18.93	15.31	24.05	22.18	18.68	15.06	25.22	23.35	19.85	16.23
		KW	2.29	2.29	2.28	2.30	2.54	2.54	2.54	2.56	2.83	2.83	2.82	2.84	3.14	3.14	3.13	3.15	3.49	3.48	3.48	3.50	3.89	3.89	3.89	3.91
		Amps	8.05	8.04	8.03	8.11	9.17	9.16	9.14	9.23	10.41	10.40	10.39	10.47	11.76	11.75	11.73	11.82	13.27	13.26	13.24	13.32	15.03	15.02	15.00	15.09
		Hi PR	257	258	260	264	297	298	300	304	339	341	342	347	385	386	388	392	434	435	437	442	487	488	490	494
		Lo PR	126	128	131	136	134	135	138	144	140	142	145	151	146	148	151	156	152	153	156	162	159	160	163	169
	1200	MBh	36.1	36.6	37.7	39.3	35.8	36.3	37.3	39.0	34.8	35.4	36.4	38.0	33.2	**33.8**	34.8	36.4	31.3	31.8	32.9	34.5	29.5	30.0	31.1	32.7
		S/T	0.84	0.76	0.61	0.46	1.00	0.76	0.62	0.47	1.00	0.79	0.65	0.50	1.00	**0.81**	0.67	0.52	1.00	1.00	0.69	0.54	1.00	1.00	0.75	0.60
		ΔT	23.24	21.36	17.87	14.25	23.19	21.31	17.82	14.19	23.45	21.58	18.08	14.46	23.17	**21.29**	17.80	14.17	22.92	21.04	17.55	13.92	24.09	22.22	18.72	15.10
		KW	2.30	2.30	2.29	2.31	2.56	2.55	2.55	2.57	2.84	2.84	2.84	2.86	3.15	**3.15**	3.15	3.17	3.50	3.50	3.49	3.51	3.91	3.90	3.90	3.92
		Amps	8.11	8.10	8.08	8.17	9.23	9.22	9.20	9.28	10.47	10.46	10.44	10.53	11.82	**11.81**	11.79	11.88	13.32	13.31	13.30	13.38	15.09	15.08	15.06	15.15
		Hi PR	259	260	262	266	299	300	302	307	342	343	345	349	387	**388**	390	395	436	438	439	444	489	490	492	496
		Lo PR	128	129	133	138	136	137	140	146	142	144	147	152	148	**150**	153	158	154	155	158	164	161	162	165	171
	1350	MBh	36.7	37.2	38.2	39.9	36.3	36.8	37.9	39.5	35.4	35.9	37.0	38.6	33.8	34.3	35.4	37.0	31.9	32.4	33.4	35.0	30.1	30.6	31.6	33.3
		S/T	0.87	0.79	0.65	0.50	1.00	0.80	0.66	0.51	1.00	0.83	0.68	0.53	1.00	0.85	0.70	0.55	1.00	1.00	0.73	0.58	1.00	1.00	0.78	0.63
		ΔT	22.29	20.41	16.92	13.29	22.23	20.36	16.86	13.24	22.50	20.62	17.13	13.50	22.21	20.34	16.85	13.22	21.96	20.09	16.59	12.97	23.14	21.26	17.77	14.14
		KW	2.31	2.31	2.31	2.32	2.57	2.57	2.56	2.58	2.85	2.85	2.85	2.87	3.16	3.16	3.16	3.18	3.51	3.51	3.50	3.52	3.92	3.91	3.91	3.93
		Amps	8.16	8.15	8.13	8.22	9.27	9.27	9.25	9.33	10.52	10.51	10.49	10.58	11.87	11.86	11.84	11.92	13.37	13.36	13.34	13.43	15.14	15.13	15.11	15.20
		Hi PR	261	262	264	268	301	302	304	309	344	345	347	351	389	390	392	397	439	440	441	446	491	492	494	498
		Lo PR	130	132	135	140	138	139	142	148	144	146	149	154	150	152	155	160	156	157	160	166	163	164	167	173

IDB: Entering Indoor Dry Bulb Temperature

Shaded area reflects ACCA (TVA) conditions

kW = Total system power

High and low pressures are measured at the liquid and suction service valves.

Amps = outdoor unit amps (comp.+fan)

Expanded Cooling Data — GPGM536***41 Stage 2 (cont.)

			Outdoor Ambient Temperature																							
			65ºF				75ºF				85ºF				95ºF				105ºF				115ºF			
			Entering Indoor Wet Bulb Temperature																							
IDB	Airflow		59	63	67	71	59	63	67	71	59	63	67	71	59	63	67	71	59	63	67	71	59	63	67	71
80	1050	MBh	35.8	36.3	37.4	39.0	35.5	36.0	37.1	38.7	34.6	35.1	36.1	37.8	33.0	33.5	34.5	36.2	31.0	31.5	32.6	34.2	29.2	29.7	30.8	32.4
		S/T	1.00	0.83	0.68	0.53	1.00	0.83	0.69	0.54	1.00	0.86	0.72	0.57	1.00	1.00	0.74	0.59	1.00	1.00	0.76	0.61	1.00	1.00	0.81	0.66
		ΔT	28.52	26.64	23.15	19.52	28.46	26.59	23.09	19.47	28.73	26.85	23.36	19.73	28.44	26.57	23.08	19.45	28.19	26.32	22.82	19.20	29.37	27.49	24.00	20.37
		KW	2.29	2.29	2.28	2.30	2.55	2.54	2.54	2.56	2.83	2.83	2.82	2.84	3.14	3.14	3.13	3.15	3.49	3.49	3.48	3.50	3.89	3.89	3.89	3.91
		Amps	8.06	8.05	8.03	8.12	9.17	9.17	9.15	9.23	10.42	10.41	10.39	10.48	11.77	11.76	11.74	11.82	13.27	13.26	13.24	13.33	15.04	15.03	15.01	15.09
		Hi PR	257	258	260	264	298	299	300	305	340	341	343	347	386	387	388	393	435	436	438	442	487	488	490	495
		Lo PR	127	128	131	137	134	136	139	144	141	143	146	151	147	148	151	157	152	154	157	162	159	161	164	169
	1200	MBh	36.3	36.8	37.8	39.5	36.0	36.5	37.5	39.2	35.0	35.5	36.6	38.2	33.4	33.9	**35.0**	36.6	31.5	32.0	33.0	34.7	29.7	30.2	31.3	32.9
		S/T	1.00	0.89	0.75	0.60	1.00	0.90	0.75	0.60	1.00	0.92	0.78	0.63	1.00	1.00	**0.80**	0.65	1.00	1.00	0.82	0.67	1.00	1.00	0.88	0.73
		ΔT	27.38	25.51	22.01	18.39	27.33	25.46	21.96	18.34	27.60	25.72	22.23	18.60	27.31	25.44	**21.94**	18.32	27.06	25.19	21.69	18.07	28.24	26.36	22.87	19.24
		KW	2.30	2.30	2.30	2.32	2.56	2.56	2.55	2.57	2.84	2.84	2.84	2.86	3.15	3.15	**3.15**	3.17	3.50	3.50	3.49	3.51	3.91	3.90	3.90	3.92
		Amps	8.12	8.11	8.09	8.17	9.23	9.22	9.20	9.29	10.48	10.47	10.45	10.53	11.82	11.82	**11.80**	11.88	13.33	13.32	13.30	13.39	15.10	15.09	15.07	15.15
		Hi PR	259	260	262	267	300	301	303	307	342	343	345	349	388	389	**391**	395	437	438	440	444	489	491	492	497
		Lo PR	128	130	133	139	136	138	141	146	143	144	148	153	149	150	**153**	159	154	156	159	164	161	163	166	171
	1350	MBh	36.8	37.3	38.4	40.0	36.5	37.0	38.1	39.7	35.6	36.1	37.2	38.8	34.0	34.5	35.6	37.2	32.0	32.5	33.6	35.2	30.3	30.8	31.8	33.4
		S/T	1.00	0.93	0.78	0.63	1.00	0.93	0.79	0.64	1.00	1.00	0.82	0.66	1.00	1.00	0.84	0.69	1.00	1.00	0.86	0.71	1.00	1.00	1.00	0.76
		ΔT	26.43	24.56	21.06	17.44	26.38	24.51	21.01	17.39	26.64	24.77	21.27	17.65	26.36	24.49	20.99	17.37	26.11	24.24	20.74	17.12	27.28	25.41	21.91	18.29
		KW	2.31	2.31	2.31	2.33	2.57	2.57	2.56	2.58	2.86	2.85	2.85	2.87	3.17	3.16	3.16	3.18	3.51	3.51	3.51	3.53	3.92	3.92	3.91	3.93
		Amps	8.17	8.16	8.14	8.22	9.28	9.27	9.25	9.34	10.53	10.52	10.50	10.58	11.87	11.86	11.84	11.93	13.38	13.37	13.35	13.44	15.14	15.14	15.12	15.20
		Hi PR	261	262	264	269	302	303	305	309	344	345	347	352	390	391	393	397	439	440	442	446	492	493	494	499
		Lo PR	131	132	135	141	138	140	143	148	145	146	150	155	151	152	155	161	156	158	161	166	163	165	168	173
85	1050	MBh	36.4	36.9	38.0	39.6	36.1	36.6	37.7	39.3	35.2	35.7	36.7	38.4	33.6	34.1	35.1	36.8	31.6	32.1	33.2	34.8	29.8	30.3	31.4	33.0
		S/T	1.00	0.93	0.79	0.64	1.00	1.00	0.80	0.65	1.00	1.00	0.82	0.67	1.00	1.00	0.84	0.69	1.00	1.00	1.00	0.72	1.00	1.00	1.00	0.77
		ΔT	32.19	30.32	26.82	23.20	32.14	30.27	26.77	23.15	32.40	30.53	27.03	23.41	32.12	30.25	26.75	23.13	31.87	30.00	26.50	22.88	33.04	31.17	27.67	24.05
		KW	2.29	2.29	2.29	2.31	2.55	2.55	2.54	2.56	2.84	2.83	2.83	2.85	3.15	3.14	3.14	3.16	3.49	3.49	3.49	3.51	3.90	3.90	3.89	3.91
		Amps	8.08	8.07	8.05	8.14	9.20	9.19	9.17	9.25	10.44	10.43	10.41	10.50	11.79	11.78	11.76	11.85	13.29	13.28	13.26	13.35	15.06	15.05	15.03	15.12
		Hi PR	258	259	261	266	299	300	302	306	341	342	344	349	387	388	390	394	436	437	439	443	488	490	491	496
		Lo PR	128	130	133	139	136	138	141	146	143	144	148	153	149	150	153	159	154	156	159	164	161	163	166	171
	1200	MBh	36.9	37.4	38.4	40.1	36.6	37.1	38.1	39.8	35.6	36.1	37.2	38.8	34.0	34.5	35.6	37.2	32.1	32.6	33.6	35.3	30.3	30.8	31.9	33.5
		S/T	1.00	1.00	0.85	0.70	1.00	1.00	0.86	0.71	1.00	1.00	0.89	0.74	1.00	1.00	0.91	0.76	1.00	1.00	1.00	0.78	1.00	1.00	1.00	0.83
		ΔT	31.06	29.19	25.69	22.07	31.01	29.14	25.64	22.02	31.27	29.40	25.90	22.28	30.99	29.12	25.62	22.00	30.74	28.87	25.37	21.75	31.91	30.04	26.54	22.92
		KW	2.31	2.30	2.30	2.32	2.56	2.56	2.56	2.58	2.85	2.85	2.84	2.86	3.16	3.16	3.15	3.17	3.51	3.50	3.50	3.52	3.91	3.91	3.91	3.93
		Amps	8.14	8.13	8.11	8.20	9.25	9.24	9.23	9.31	10.50	10.49	10.47	10.56	11.85	11.84	11.82	11.90	13.35	13.34	13.32	13.41	15.12	15.11	15.09	15.17
		Hi PR	260	262	263	268	301	302	304	308	343	344	346	351	389	390	392	396	438	439	441	446	491	492	494	498
		Lo PR	130	132	135	140	138	140	143	148	145	146	149	155	150	152	155	161	156	158	161	166	163	165	168	173
	1350	MBh	37.4	37.9	39.0	40.6	37.1	37.6	38.7	40.3	36.2	36.7	37.8	39.4	34.6	35.1	36.2	37.8	32.6	33.1	34.2	35.8	30.9	31.4	32.4	34.0
		S/T	1.00	1.00	0.89	0.74	1.00	1.00	0.90	0.75	1.00	1.00	0.92	0.77	1.00	1.00	0.94	0.79	1.00	1.00	1.00	0.82	1.00	1.00	1.00	0.87
		ΔT	30.11	28.24	24.74	21.12	30.06	28.18	24.69	21.06	30.32	28.45	24.95	21.33	30.04	28.17	24.67	21.05	29.79	27.91	24.42	20.80	30.96	29.09	25.59	21.97
		KW	2.32	2.32	2.31	2.33	2.57	2.57	2.57	2.59	2.86	2.86	2.85	2.87	3.17	3.17	3.16	3.18	3.52	3.51	3.51	3.53	3.92	3.92	3.92	3.94
		Amps	8.19	8.18	8.16	8.24	9.30	9.29	9.27	9.36	10.55	10.54	10.52	10.60	11.89	11.89	11.87	11.95	13.40	13.39	13.37	13.46	15.17	15.16	15.14	15.22
		Hi PR	263	264	265	270	303	304	306	310	345	347	348	353	391	392	394	398	440	441	443	448	493	494	496	500
		Lo PR	132	134	137	143	140	142	145	150	147	148	152	157	152	154	157	163	158	160	163	168	165	167	170	175

IDB: Entering Indoor Dry Bulb Temperature

Shaded area reflects AHRI (TVA) conditions

kW = Total system power

High and low pressures are measured at the liquid and suction service valves.

Amps = outdoor unit amps (comp.+fan)

Expanded Cooling Data — GPGM542***41 Stage 1

IDB	Airflow		Outdoor Ambient Temperature 65ºF				75ºF				85ºF				95ºF				105ºF				115ºF			
			Entering Indoor Wet Bulb Temperature																							
			59	63	67	71	59	63	67	71	59	63	67	71	59	63	67	71	59	63	67	71	59	63	67	71
70	770	MBh	30.0	30.4	31.3	-	29.7	30.2	31.1	-	29.0	29.4	30.3	-	27.6	28.0	28.9	-	26.0	26.4	27.3	-	24.5	24.9	25.8	-
		S/T	1.00	1.00	1.00	-	1.00	1.00	1.00	-	1.00	1.00	1.00	-	1.00	1.00	1.00	-	1.00	1.00	1.00	-	1.00	1.00	1.00	-
		ΔT	20.27	18.39	14.88	-	20.21	18.34	14.83	-	20.48	18.60	15.09	-	20.19	18.32	14.81	-	19.94	18.06	14.56	-	21.12	19.24	15.73	-
		KW	1.66	1.66	1.66	-	1.86	1.86	1.86	-	2.08	2.08	2.07	-	2.32	2.31	2.31	-	2.58	2.58	2.58	-	2.89	2.89	2.89	-
		Amps	5.94	5.93	5.92	-	6.79	6.78	6.77	-	7.74	7.73	7.72	-	8.77	8.76	8.75	-	9.92	9.91	9.90	-	11.27	11.26	11.25	-
		Hi PR	255	256	258	-	296	297	298	-	338	339	341	-	383	384	386	-	432	433	435	-	484	486	487	-
		Lo PR	128	129	133	-	136	137	141	-	142	144	147	-	148	150	153	-	154	155	159	-	161	163	166	-
	875	MBh	30.4	30.8	31.7	-	30.1	30.5	31.4	-	29.3	29.8	30.7	-	28.0	28.4	29.3	-	26.3	26.8	27.7	-	24.8	25.3	26.2	-
		S/T	1.00	1.00	1.00	-	1.00	1.00	1.00	-	1.00	1.00	1.00	-	1.00	1.00	1.00	-	1.00	1.00	1.00	-	1.00	1.00	1.00	-
		ΔT	19.18	17.30	13.79	-	19.13	17.25	13.74	-	19.39	17.51	14.01	-	19.11	17.23	13.72	-	18.86	16.98	13.47	-	20.04	18.16	14.65	-
		KW	1.67	1.67	1.67	-	1.87	1.87	1.87	-	2.09	2.09	2.08	-	2.33	2.32	2.32	-	2.59	2.59	2.58	-	2.90	2.90	2.89	-
		Amps	5.98	5.97	5.96	-	6.83	6.83	6.81	-	7.78	7.78	7.76	-	8.81	8.80	8.79	-	9.96	9.95	9.94	-	11.31	11.30	11.29	-
		Hi PR	257	258	260	-	298	299	301	-	340	341	343	-	385	386	388	-	434	435	437	-	487	488	489	-
		Lo PR	130	131	135	-	137	139	142	-	144	146	149	-	150	152	155	-	156	157	161	-	163	164	168	-
	980	MBh	30.8	31.3	32.2	-	30.6	31.0	31.9	-	29.8	30.2	31.1	-	28.4	28.9	29.8	-	26.8	27.2	28.1	-	25.3	25.7	26.6	-
		S/T	1.00	1.00	1.00	-	1.00	1.00	1.00	-	1.00	1.00	1.00	-	1.00	1.00	1.00	-	1.00	1.00	1.00	-	1.00	1.00	1.00	-
		ΔT	18.26	16.38	12.87	-	18.21	16.33	12.82	-	18.47	16.59	13.09	-	18.19	16.31	12.80	-	17.94	16.06	12.55	-	19.12	17.24	13.73	-
		KW	1.68	1.68	1.68	-	1.88	1.88	1.87	-	2.10	2.10	2.09	-	2.33	2.33	2.33	-	2.60	2.60	2.59	-	2.91	2.91	2.90	-
		Amps	6.02	6.01	6.00	-	6.87	6.86	6.85	-	7.82	7.81	7.80	-	8.85	8.84	8.83	-	10.00	9.99	9.97	-	11.34	11.34	11.32	-
		Hi PR	259	260	262	-	300	301	303	-	342	343	345	-	387	388	390	-	436	437	439	-	489	490	491	-
		Lo PR	132	133	137	-	139	141	144	-	146	148	151	-	152	154	157	-	158	159	163	-	165	166	170	-
75	770	MBh	30.0	30.4	31.3	32.7	29.8	30.2	31.1	32.4	29.0	29.4	30.3	31.7	27.6	28.0	28.9	30.3	26.0	26.4	27.3	28.7	24.5	24.9	25.8	27.2
		S/T	1.00	1.00	1.00	1.00	1.00	1.00	1.00	1.00	1.00	1.00	1.00	1.00	1.00	1.00	1.00	1.00	1.00	1.00	1.00	1.00	1.00	1.00	1.00	1.00
		ΔT	24.40	22.52	19.01	15.38	24.34	22.47	18.96	15.32	24.61	22.73	19.22	15.59	24.33	22.45	18.94	15.30	24.07	22.20	18.69	15.05	25.25	23.37	19.86	16.23
		KW	1.66	1.66	1.66	1.67	1.86	1.86	1.85	1.87	2.08	2.08	2.07	2.09	2.31	2.31	2.31	2.32	2.58	2.58	2.57	2.59	2.89	2.89	2.88	2.90
		Amps	5.93	5.93	5.91	5.98	6.78	6.78	6.76	6.83	7.74	7.73	7.71	7.78	8.76	8.76	8.74	8.81	9.91	9.91	9.89	9.96	11.26	11.25	11.24	11.30
		Hi PR	256	257	258	263	296	297	299	303	338	339	341	345	383	385	386	391	432	433	435	440	485	486	488	492
		Lo PR	128	130	133	138	136	137	141	146	143	144	147	153	148	150	153	159	154	156	159	164	161	163	166	171
	875	MBh	30.4	30.8	31.7	33.1	30.1	30.6	31.5	32.8	29.4	29.8	30.7	32.0	28.0	**28.4**	29.3	30.7	26.4	26.8	27.7	29.0	24.9	25.3	26.2	27.5
		S/T	1.00	1.00	1.00	1.00	1.00	1.00	1.00	1.00	1.00	1.00	1.00	1.00	1.00	**1.00**	1.00	1.00	1.00	1.00	1.00	1.00	1.00	1.00	1.00	1.00
		ΔT	23.31	21.43	17.92	14.29	23.26	21.38	17.87	14.24	23.52	21.65	18.14	14.50	23.24	**21.36**	17.85	14.22	22.99	21.11	17.60	13.97	24.17	22.29	18.78	15.14
		KW	1.67	1.67	1.67	1.68	1.87	1.87	1.86	1.88	2.09	2.09	2.08	2.10	2.32	**2.32**	2.32	2.33	2.59	2.59	2.58	2.60	2.90	2.90	2.89	2.91
		Amps	5.98	5.97	5.95	6.02	6.83	6.82	6.81	6.87	7.78	7.77	7.76	7.82	8.81	**8.80**	8.78	8.85	9.95	9.95	9.93	10.00	11.30	11.30	11.28	11.35
		Hi PR	258	259	260	265	298	299	301	305	340	341	343	347	385	**387**	388	393	434	436	437	442	487	488	490	494
		Lo PR	130	131	135	140	138	139	142	148	144	146	149	155	150	**152**	155	160	156	157	161	166	163	164	168	173
	980	MBh	30.9	31.3	32.2	33.5	30.6	31.0	31.9	33.3	29.8	30.2	31.1	32.5	28.5	28.9	29.8	31.1	26.8	27.2	28.1	29.5	25.3	25.7	26.6	28.0
		S/T	1.00	1.00	1.00	1.00	1.00	1.00	1.00	1.00	1.00	1.00	1.00	1.00	1.00	1.00	1.00	1.00	1.00	1.00	1.00	1.00	1.00	1.00	1.00	1.00
		ΔT	22.39	20.51	17.00	13.37	22.34	20.46	16.95	13.32	22.60	20.73	17.22	13.58	22.32	20.44	16.93	13.30	22.07	20.19	16.68	13.05	23.25	21.37	17.86	14.23
		KW	1.68	1.68	1.68	1.69	1.88	1.88	1.87	1.89	2.10	2.09	2.09	2.11	2.33	2.33	2.33	2.34	2.60	2.60	2.59	2.61	2.91	2.91	2.90	2.92
		Amps	6.01	6.00	5.99	6.06	6.86	6.86	6.84	6.91	7.81	7.81	7.79	7.86	8.84	8.83	8.82	8.89	9.99	9.98	9.97	10.03	11.34	11.33	11.32	11.38
		Hi PR	260	261	263	267	300	301	303	307	342	343	345	349	388	389	390	395	436	438	439	444	489	490	492	496
		Lo PR	132	133	137	142	140	141	144	150	146	148	151	157	152	154	157	162	158	159	163	168	165	166	170	175

IDB: Entering Indoor Dry Bulb Temperature

High and low pressures are measured at the liquid and suction service valves.

Shaded area reflects ACCA (TVA) conditions

kW = Total system power

Amps = outdoor unit amps (comp.+fan)

Expanded Cooling Data — GPGM542***41 Stage 1 (cont.)

			Outdoor Ambient Temperature																							
			65ºF				75ºF				85ºF				95ºF				105ºF				115ºF			
			Entering Indoor Wet Bulb Temperature																							
IDB	Airflow		59	63	67	71	59	63	67	71	59	63	67	71	59	63	67	71	59	63	67	71	59	63	67	71
80	770	MBh	30.2	30.6	31.5	32.9	29.9	30.3	31.2	32.6	29.1	29.6	30.4	31.8	27.8	28.2	29.1	30.5	26.1	26.6	27.5	28.8	24.6	25.1	25.9	27.3
		S/T	1.00	1.00	1.00	1.00	1.00	1.00	1.00	1.00	1.00	1.00	1.00	1.00	1.00	1.00	1.00	1.00	1.00	1.00	1.00	1.00	1.00	1.00	1.00	1.00
		ΔT	28.56	26.68	23.17	19.53	28.50	26.63	23.12	19.48	28.77	26.89	23.38	19.75	28.48	26.61	23.10	19.46	28.23	26.35	22.85	19.21	29.41	27.53	24.02	20.39
		KW	1.66	1.66	1.66	1.67	1.86	1.86	1.86	1.87	2.08	2.08	2.07	2.09	2.32	2.31	2.31	2.33	2.58	2.58	2.57	2.59	2.89	2.89	2.88	2.90
		Amps	5.94	5.93	5.92	5.98	6.79	6.78	6.77	6.83	7.74	7.73	7.72	7.78	8.77	8.76	8.75	8.81	9.92	9.91	9.90	9.96	11.27	11.26	11.24	11.31
		Hi PR	256	257	259	263	296	297	299	304	338	340	341	346	384	385	387	391	433	434	436	440	485	486	488	492
		Lo PR	128	130	133	139	136	138	141	147	143	145	148	153	149	150	154	159	154	156	159	165	162	163	166	172
	875	MBh	30.6	31.0	31.9	33.2	30.3	30.7	31.6	33.0	29.5	29.9	30.8	32.2	28.2	28.6	**29.5**	30.8	26.5	26.9	27.8	29.2	25.0	25.4	26.3	27.7
		S/T	1.00	1.00	1.00	1.00	1.00	1.00	1.00	1.00	1.00	1.00	1.00	1.00	1.00	1.00	**1.00**	1.00	1.00	1.00	1.00	1.00	1.00	1.00	1.00	1.00
		ΔT	27.47	25.59	22.08	18.45	27.42	25.54	22.03	18.40	27.68	25.80	22.30	18.66	27.40	25.52	**22.01**	18.38	27.15	25.27	21.76	18.13	28.32	26.45	22.94	19.30
		KW	1.67	1.67	1.67	1.68	1.87	1.87	1.87	1.88	2.09	2.09	2.08	2.10	2.33	2.32	**2.32**	2.34	2.59	2.59	2.58	2.60	2.90	2.90	2.89	2.91
		Amps	5.98	5.97	5.96	6.02	6.83	6.82	6.81	6.88	7.78	7.78	7.76	7.83	8.81	8.80	**8.79**	8.85	9.96	9.95	9.94	10.00	11.31	11.30	11.29	11.35
		Hi PR	258	259	261	265	298	299	301	306	341	342	343	348	386	387	**389**	393	435	436	438	442	487	488	490	495
		Lo PR	130	132	135	141	138	140	143	148	145	146	150	155	151	152	**155**	161	156	158	161	167	163	165	168	174
	980	MBh	31.0	31.4	32.3	33.7	30.7	31.2	32.1	33.4	30.0	30.4	31.3	32.6	28.6	29.0	29.9	31.3	27.0	27.4	28.3	29.7	25.5	25.9	26.8	28.1
		S/T	1.00	1.00	1.00	1.00	1.00	1.00	1.00	1.00	1.00	1.00	1.00	1.00	1.00	1.00	1.00	1.00	1.00	1.00	1.00	1.00	1.00	1.00	1.00	1.00
		ΔT	26.55	24.67	21.16	17.53	26.50	24.62	21.11	17.48	26.76	24.88	21.38	17.74	26.48	24.60	21.09	17.46	26.23	24.35	20.84	17.21	27.41	25.53	22.02	18.38
		KW	1.68	1.68	1.68	1.69	1.88	1.88	1.87	1.89	2.10	2.10	2.09	2.11	2.33	2.33	2.33	2.34	2.60	2.60	2.59	2.61	2.91	2.91	2.90	2.92
		Amps	6.02	6.01	5.99	6.06	6.87	6.86	6.85	6.91	7.82	7.81	7.80	7.86	8.85	8.84	8.82	8.89	10.00	9.99	9.97	10.04	11.34	11.34	11.32	11.39
		Hi PR	260	261	263	267	300	301	303	308	343	344	345	350	388	389	391	395	437	438	440	444	489	490	492	497
		Lo PR	132	134	137	143	140	142	145	150	147	148	152	157	153	154	157	163	158	160	163	169	165	167	170	176
85	770	MBh	30.7	31.1	32.0	33.4	30.4	30.8	31.7	33.1	29.6	30.1	31.0	32.3	28.3	28.7	29.6	31.0	26.6	27.1	28.0	29.3	25.1	25.6	26.5	27.8
		S/T	1.00	1.00	1.00	1.00	1.00	1.00	1.00	1.00	1.00	1.00	1.00	1.00	1.00	1.00	1.00	1.00	1.00	1.00	1.00	1.00	1.00	1.00	1.00	1.00
		ΔT	32.24	30.37	26.86	23.22	32.19	30.31	26.81	23.17	32.46	30.58	27.07	23.44	32.17	30.29	26.79	23.15	31.92	30.04	26.54	22.90	33.10	31.22	27.71	24.08
		KW	1.67	1.67	1.66	1.68	1.86	1.86	1.86	1.87	2.08	2.08	2.08	2.09	2.32	2.32	2.31	2.33	2.58	2.58	2.58	2.59	2.89	2.89	2.89	2.90
		Amps	5.95	5.95	5.93	6.00	6.81	6.80	6.78	6.85	7.76	7.75	7.73	7.80	8.78	8.78	8.76	8.83	9.93	9.93	9.91	9.98	11.28	11.27	11.26	11.33
		Hi PR	257	258	260	265	297	299	300	305	340	341	343	347	385	386	388	392	434	435	437	441	486	487	489	494
		Lo PR	130	132	135	141	138	140	143	148	145	147	150	155	151	152	156	161	156	158	161	167	163	165	168	174
	875	MBh	31.1	31.5	32.4	33.8	30.8	31.2	32.1	33.5	30.0	30.4	31.3	32.7	28.7	29.1	30.0	31.4	27.0	27.4	28.3	29.7	25.5	25.9	26.8	28.2
		S/T	1.00	1.00	1.00	1.00	1.00	1.00	1.00	1.00	1.00	1.00	1.00	1.00	1.00	1.00	1.00	1.00	1.00	1.00	1.00	1.00	1.00	1.00	1.00	1.00
		ΔT	31.16	29.28	25.77	22.14	31.11	29.23	25.72	22.09	31.37	29.49	25.98	22.35	31.09	29.21	25.70	22.07	30.84	28.96	25.45	21.82	32.01	30.13	26.63	22.99
		KW	1.68	1.68	1.67	1.69	1.87	1.87	1.87	1.88	2.09	2.09	2.09	2.10	2.33	2.33	2.32	2.34	2.59	2.59	2.59	2.60	2.90	2.90	2.90	2.91
		Amps	6.00	5.99	5.98	6.04	6.85	6.84	6.83	6.89	7.80	7.79	7.78	7.84	8.83	8.82	8.81	8.87	9.98	9.97	9.95	10.02	11.32	11.32	11.30	11.37
		Hi PR	259	260	262	267	300	301	302	307	342	343	345	349	387	388	390	395	436	437	439	443	488	490	491	496
		Lo PR	132	134	137	142	140	142	145	150	147	148	152	157	153	154	157	163	158	160	163	168	165	167	170	176
	980	MBh	31.5	31.9	32.8	34.2	31.2	31.7	32.6	33.9	30.5	30.9	31.8	33.2	29.1	29.5	30.4	31.8	27.5	27.9	28.8	30.2	26.0	26.4	27.3	28.7
		S/T	1.00	1.00	1.00	1.00	1.00	1.00	1.00	1.00	1.00	1.00	1.00	1.00	1.00	1.00	1.00	1.00	1.00	1.00	1.00	1.00	1.00	1.00	1.00	1.00
		ΔT	30.24	28.36	24.85	21.22	30.19	28.31	24.80	21.17	30.45	28.57	25.07	21.43	30.17	28.29	24.78	21.15	29.92	28.04	24.53	20.90	31.09	29.21	25.71	22.07
		KW	1.69	1.68	1.68	1.70	1.88	1.88	1.88	1.89	2.10	2.10	2.10	2.11	2.34	2.34	2.33	2.35	2.60	2.60	2.60	2.61	2.91	2.91	2.91	2.92
		Amps	6.03	6.03	6.01	6.08	6.88	6.88	6.86	6.93	7.83	7.83	7.81	7.88	8.86	8.86	8.84	8.91	10.01	10.00	9.99	10.06	11.36	11.35	11.34	11.40
		Hi PR	261	262	264	269	302	303	304	309	344	345	347	351	389	390	392	397	438	439	441	446	490	492	493	498
		Lo PR	134	136	139	144	142	144	147	152	149	150	154	159	155	156	159	165	160	162	165	170	167	169	172	178

IDB: Entering Indoor Dry Bulb Temperature

Shaded area reflects AHRI (TVA) conditions

kW = Total system power

High and low pressures are measured at the liquid and suction service valves.

Amps = outdoor unit amps (comp.+fan)

Expanded Cooling Data — GPGM542***41 Stage 2

			Outdoor Ambient Temperature																							
			65ºF				75ºF				85ºF				95ºF				105ºF				115ºF			
			Entering Indoor Wet Bulb Temperature																							
IDB	Airflow		59	63	67	71	59	63	67	71	59	63	67	71	59	63	67	71	59	63	67	71	59	63	67	71
70	1100	MBh	41.7	42.3	43.6	-	41.4	41.9	43.2	-	40.3	40.9	42.1	-	38.4	39.0	40.2	-	36.1	36.7	37.9	-	34.0	34.6	35.9	-
		S/T	1.00	1.00	1.00	-	1.00	1.00	1.00	-	1.00	1.00	1.00	-	1.00	1.00	1.00	-	1.00	1.00	1.00	-	1.00	1.00	1.00	-
		ΔT	21.00	19.05	15.42	-	20.95	19.00	15.37	-	21.22	19.27	15.64	-	20.93	18.98	15.35	-	20.67	18.72	15.08	-	21.89	19.94	16.30	-
		KW	2.65	2.64	2.64	-	2.96	2.96	2.95	-	3.31	3.30	3.30	-	3.68	3.68	3.67	-	4.10	4.10	4.09	-	4.59	4.59	4.59	-
		Amps	9.44	9.43	9.41	-	10.80	10.78	10.76	-	12.31	12.30	12.27	-	13.94	13.93	13.91	-	15.77	15.76	15.73	-	17.91	17.90	17.88	-
		Hi PR	267	268	270	-	309	310	312	-	353	354	356	-	401	402	404	-	452	453	455	-	507	508	510	-
		Lo PR	124	126	129	-	132	134	137	-	139	140	143	-	144	146	149	-	150	151	154	-	157	158	161	-
	1250	MBh	42.3	42.8	44.1	-	41.9	42.5	43.7	-	40.8	41.4	42.6	-	38.9	39.5	40.8	-	36.6	37.2	38.5	-	34.5	35.1	36.4	-
		S/T	1.00	1.00	1.00	-	1.00	1.00	1.00	-	1.00	1.00	1.00	-	1.00	1.00	1.00	-	1.00	1.00	1.00	-	1.00	1.00	1.00	-
		ΔT	19.88	17.93	14.29	-	19.82	17.88	14.24	-	20.10	18.15	14.51	-	19.80	17.86	14.22	-	19.54	17.60	13.96	-	20.76	18.81	15.18	-
		KW	2.66	2.66	2.65	-	2.97	2.97	2.97	-	3.32	3.32	3.31	-	3.70	3.69	3.69	-	4.12	4.11	4.11	-	4.61	4.61	4.60	-
		Amps	9.51	9.50	9.48	-	10.86	10.85	10.83	-	12.37	12.36	12.34	-	14.01	14.00	13.97	-	15.84	15.82	15.80	-	17.98	17.97	17.94	-
		Hi PR	269	270	272	-	311	312	314	-	355	357	359	-	403	404	406	-	454	455	457	-	509	510	512	-
		Lo PR	126	128	131	-	134	135	138	-	140	142	145	-	146	148	151	-	151	153	156	-	158	160	163	-
	1400	MBh	42.9	43.5	44.7	-	42.5	43.1	44.4	-	41.4	42.0	43.3	-	39.6	40.1	41.4	-	37.3	37.9	39.1	-	35.2	35.8	37.0	-
		S/T	1.00	1.00	1.00	-	1.00	1.00	1.00	-	1.00	1.00	1.00	-	1.00	1.00	1.00	-	1.00	1.00	1.00	-	1.00	1.00	1.00	-
		ΔT	18.92	16.98	13.34	-	18.87	16.92	13.29	-	19.14	17.20	13.56	-	18.85	16.90	13.27	-	18.59	16.64	13.01	-	19.81	17.86	14.23	-
		KW	2.68	2.67	2.67	-	2.99	2.98	2.98	-	3.33	3.33	3.33	-	3.71	3.71	3.70	-	4.13	4.13	4.12	-	4.62	4.62	4.62	-
		Amps	9.57	9.56	9.53	-	10.92	10.91	10.89	-	12.43	12.42	12.40	-	14.07	14.05	14.03	-	15.89	15.88	15.86	-	18.04	18.02	18.00	-
		Hi PR	271	272	274	-	313	315	316	-	358	359	361	-	405	406	408	-	456	457	459	-	511	512	514	-
		Lo PR	128	130	133	-	136	137	140	-	142	144	147	-	148	149	153	-	153	155	158	-	160	162	165	-
75	1100	MBh	41.8	42.3	43.6	45.5	41.4	42.0	43.2	45.1	40.3	40.9	42.1	44.0	38.4	39.0	40.3	42.2	36.1	36.7	38.0	39.9	34.0	34.6	35.9	37.8
		S/T	1.00	1.00	1.00	1.00	1.00	1.00	1.00	1.00	1.00	1.00	1.00	1.00	1.00	1.00	1.00	1.00	1.00	1.00	1.00	1.00	1.00	1.00	1.00	1.00
		ΔT	25.28	23.33	19.70	15.93	25.23	23.28	19.65	15.88	25.50	23.55	19.92	16.15	25.21	23.26	19.63	15.86	24.95	23.00	19.37	15.60	26.17	24.22	20.58	16.82
		KW	2.64	2.64	2.64	2.66	2.96	2.95	2.95	2.97	3.30	3.30	3.30	3.32	3.68	3.68	3.67	3.70	4.10	4.10	4.09	4.12	4.59	4.59	4.58	4.61
		Amps	9.43	9.42	9.40	9.50	10.79	10.78	10.75	10.86	12.30	12.29	12.26	12.37	13.93	13.92	13.90	14.00	15.76	15.75	15.73	15.83	17.90	17.89	17.87	17.97
		Hi PR	267	268	270	275	309	311	312	317	354	355	357	361	401	402	404	409	452	453	455	460	507	508	510	515
		Lo PR	124	126	129	134	132	134	137	142	139	140	143	149	144	146	149	154	150	151	154	160	157	158	161	167
	1250	MBh	42.3	42.9	44.1	46.0	41.9	42.5	43.7	45.7	40.8	41.4	42.7	44.6	38.9	**39.5**	40.8	42.7	36.7	37.2	38.5	40.4	34.6	35.2	36.4	38.3
		S/T	1.00	1.00	1.00	1.00	1.00	1.00	1.00	1.00	1.00	1.00	1.00	1.00	1.00	**1.00**	1.00	1.00	1.00	1.00	1.00	1.00	1.00	1.00	1.00	1.00
		ΔT	24.16	22.21	18.57	14.81	24.10	22.16	18.52	14.76	24.38	22.43	18.80	15.03	24.08	**22.14**	18.50	14.74	23.82	21.88	18.24	14.48	25.04	23.10	19.46	15.69
		KW	2.66	2.66	2.65	2.68	2.97	2.97	2.96	2.99	3.32	3.32	3.31	3.33	3.69	**3.69**	3.69	3.71	4.12	4.11	4.11	4.13	4.61	4.61	4.60	4.62
		Amps	9.50	9.49	9.47	9.57	10.85	10.84	10.82	10.92	12.36	12.35	12.33	12.43	14.00	**13.99**	13.97	14.07	15.83	15.82	15.79	15.90	17.97	17.96	17.94	18.04
		Hi PR	269	271	272	277	312	313	315	319	356	357	359	363	403	**404**	406	411	454	456	457	462	509	510	512	517
		Lo PR	126	128	131	136	134	135	138	144	140	142	145	150	146	**148**	151	156	151	153	156	161	158	160	163	168
	1400	MBh	42.9	43.5	44.7	46.7	42.5	43.1	44.4	46.3	41.5	42.0	43.3	45.2	39.6	40.2	41.4	43.3	37.3	37.9	39.1	41.0	35.2	35.8	37.0	38.9
		S/T	1.00	1.00	1.00	1.00	1.00	1.00	1.00	1.00	1.00	1.00	1.00	1.00	1.00	1.00	1.00	1.00	1.00	1.00	1.00	1.00	1.00	1.00	1.00	1.00
		ΔT	23.20	21.26	17.62	13.86	23.15	21.20	17.57	13.80	23.42	21.48	17.84	14.08	23.13	21.18	17.55	13.78	22.87	20.92	17.29	13.52	24.09	22.14	18.51	14.74
		KW	2.67	2.67	2.67	2.69	2.98	2.98	2.98	3.00	3.33	3.33	3.32	3.35	3.71	3.71	3.70	3.72	4.13	4.13	4.12	4.14	4.62	4.62	4.61	4.64
		Amps	9.56	9.55	9.52	9.63	10.91	10.90	10.88	10.98	12.42	12.41	12.39	12.49	14.06	14.05	14.02	14.13	15.88	15.87	15.85	15.95	18.03	18.02	17.99	18.10
		Hi PR	272	273	275	279	314	315	317	321	358	359	361	366	405	406	408	413	457	458	460	464	511	512	514	519
		Lo PR	128	130	133	138	136	137	140	146	142	144	147	152	148	149	153	158	153	155	158	163	160	162	165	170

IDB: Entering Indoor Dry Bulb Temperature

Shaded area reflects ACCA (TVA) conditions

kW = Total system power

High and low pressures are measured at the liquid and suction service valves.

Amps = outdoor unit amps (comp.+fan)

Expanded Cooling Data — GPGM542***41 Stage 2 (cont.)

			Outdoor Ambient Temperature																							
			65ºF				75ºF				85ºF				95ºF				105ºF				115ºF			
			Entering Indoor Wet Bulb Temperature																							
IDB	Airflow		59	63	67	71	59	63	67	71	59	63	67	71	59	63	67	71	59	63	67	71	59	63	67	71
80	1100	MBh	42.0	42.6	43.8	45.7	41.6	42.2	43.4	45.3	40.5	41.1	42.3	44.2	38.6	39.2	40.5	42.4	36.3	36.9	38.2	40.1	34.3	34.8	36.1	38.0
		S/T	1.00	1.00	1.00	1.00	1.00	1.00	1.00	1.00	1.00	1.00	1.00	1.00	1.00	1.00	1.00	1.00	1.00	1.00	1.00	1.00	1.00	1.00	1.00	1.00
		ΔT	29.59	27.64	24.01	20.24	29.54	27.59	23.96	20.19	29.81	27.86	24.23	20.46	29.52	27.57	23.94	20.17	29.26	27.31	23.68	19.91	30.48	28.53	24.89	21.13
		KW	2.65	2.64	2.64	2.66	2.96	2.96	2.95	2.97	3.31	3.30	3.30	3.32	3.68	3.68	3.67	3.70	4.10	4.10	4.09	4.12	4.59	4.59	4.59	4.61
		Amps	9.44	9.43	9.41	9.51	10.79	10.78	10.76	10.86	12.30	12.29	12.27	12.37	13.94	13.93	13.91	14.01	15.77	15.76	15.73	15.84	17.91	17.90	17.88	17.98
		Hi PR	268	269	271	275	310	311	313	318	354	355	357	362	402	403	405	409	453	454	456	460	507	509	510	515
		Lo PR	125	127	130	135	133	134	137	143	139	141	144	149	145	146	149	155	150	152	155	160	157	159	162	167
	1250	MBh	42.5	43.1	44.3	46.2	42.1	42.7	44.0	45.9	41.0	41.6	42.9	44.8	39.2	39.8	**41.0**	42.9	36.9	37.5	38.7	40.6	34.8	35.4	36.6	38.5
		S/T	1.00	1.00	1.00	1.00	1.00	1.00	1.00	1.00	1.00	1.00	1.00	1.00	1.00	1.00	**1.00**	1.00	1.00	1.00	1.00	1.00	1.00	1.00	1.00	1.00
		ΔT	28.47	26.52	22.88	19.12	28.41	26.47	22.83	19.07	28.69	26.74	23.10	19.34	28.39	26.45	**22.81**	19.05	28.13	26.19	22.55	18.79	29.35	27.41	23.77	20.00
		KW	2.66	2.66	2.65	2.68	2.97	2.97	2.97	2.99	3.32	3.32	3.31	3.34	3.70	3.69	**3.69**	3.71	4.12	4.11	4.11	4.13	4.61	4.61	4.60	4.63
		Amps	9.51	9.50	9.47	9.58	10.86	10.85	10.83	10.93	12.37	12.36	12.34	12.44	14.01	14.00	**13.97**	14.08	15.83	15.82	15.80	15.90	17.98	17.97	17.94	18.05
		Hi PR	270	271	273	278	312	313	315	320	356	357	359	364	404	405	**407**	411	455	456	458	463	510	511	513	517
		Lo PR	127	128	131	137	134	136	139	144	141	142	146	151	147	148	**151**	157	152	154	157	162	159	160	164	169
	1400	MBh	43.1	43.7	45.0	46.9	42.8	43.3	44.6	46.5	41.7	42.3	43.5	45.4	39.8	40.4	41.6	43.5	37.5	38.1	39.3	41.2	35.4	36.0	37.2	39.2
		S/T	1.00	1.00	1.00	1.00	1.00	1.00	1.00	1.00	1.00	1.00	1.00	1.00	1.00	1.00	1.00	1.00	1.00	1.00	1.00	1.00	1.00	1.00	1.00	1.00
		ΔT	27.51	25.57	21.93	18.17	27.46	25.51	21.88	18.11	27.73	25.79	22.15	18.39	27.44	25.49	21.86	18.09	27.18	25.23	21.60	17.83	28.40	26.45	22.82	19.05
		KW	2.67	2.67	2.67	2.69	2.99	2.98	2.98	3.00	3.33	3.33	3.33	3.35	3.71	3.71	3.70	3.73	4.13	4.13	4.12	4.15	4.62	4.62	4.61	4.64
		Amps	9.56	9.55	9.53	9.63	10.92	10.91	10.88	10.99	12.43	12.42	12.39	12.50	14.06	14.05	14.03	14.13	15.89	15.88	15.86	15.96	18.03	18.02	18.00	18.10
		Hi PR	272	273	275	280	314	315	317	322	358	359	361	366	406	407	409	414	457	458	460	465	512	513	515	519
		Lo PR	129	130	133	139	136	138	141	146	143	144	148	153	148	150	153	158	154	156	159	164	161	162	166	171
85	1100	MBh	42.7	43.3	44.5	46.4	42.3	42.9	44.1	46.0	41.2	41.8	43.0	45.0	39.3	39.9	41.2	43.1	37.0	37.6	38.9	40.8	35.0	35.5	36.8	38.7
		S/T	1.00	1.00	1.00	1.00	1.00	1.00	1.00	1.00	1.00	1.00	1.00	1.00	1.00	1.00	1.00	1.00	1.00	1.00	1.00	1.00	1.00	1.00	1.00	1.00
		ΔT	33.41	31.47	27.83	24.07	33.36	31.41	27.78	24.01	33.63	31.69	28.05	24.29	33.34	31.39	27.76	23.99	33.08	31.13	27.50	23.73	34.30	32.35	28.72	24.95
		KW	2.65	2.65	2.64	2.67	2.96	2.96	2.96	2.98	3.31	3.31	3.30	3.33	3.69	3.68	3.68	3.70	4.11	4.10	4.10	4.12	4.60	4.60	4.59	4.62
		Amps	9.47	9.46	9.43	9.54	10.82	10.81	10.79	10.89	12.33	12.32	12.30	12.40	13.97	13.95	13.93	14.04	15.79	15.78	15.76	15.86	17.94	17.92	17.90	18.01
		Hi PR	269	270	272	277	311	312	314	319	355	356	358	363	403	404	406	410	454	455	457	462	509	510	512	516
		Lo PR	127	128	132	137	134	136	139	144	141	143	146	151	147	148	151	157	152	154	157	162	159	161	164	169
	1250	MBh	43.2	43.8	45.0	46.9	42.8	43.4	44.7	46.6	41.7	42.3	43.6	45.5	39.9	40.5	41.7	43.6	37.6	38.2	39.4	41.3	35.5	36.1	37.3	39.2
		S/T	1.00	1.00	1.00	1.00	1.00	1.00	1.00	1.00	1.00	1.00	1.00	1.00	1.00	1.00	1.00	1.00	1.00	1.00	1.00	1.00	1.00	1.00	1.00	1.00
		ΔT	32.29	30.34	26.71	22.94	32.24	30.29	26.65	22.89	32.51	30.56	26.93	23.16	32.22	30.27	26.63	22.87	31.96	30.01	26.37	22.61	33.17	31.23	27.59	23.83
		KW	2.67	2.67	2.66	2.68	2.98	2.98	2.97	3.00	3.33	3.32	3.32	3.34	3.70	3.70	3.69	3.72	4.12	4.12	4.11	4.14	4.62	4.61	4.61	4.63
		Amps	9.53	9.52	9.50	9.60	10.89	10.88	10.85	10.96	12.40	12.39	12.36	12.47	14.03	14.02	14.00	14.10	15.86	15.85	15.83	15.93	18.00	17.99	17.97	18.07
		Hi PR	271	272	274	279	313	314	316	321	357	359	360	365	405	406	408	413	456	457	459	464	511	512	514	519
		Lo PR	129	130	133	139	136	138	141	146	143	144	148	153	148	150	153	158	154	155	159	164	161	162	165	171
	1400	MBh	43.8	44.4	45.7	47.6	43.5	44.0	45.3	47.2	42.4	43.0	44.2	46.1	40.5	41.1	42.3	44.2	38.2	38.8	40.0	41.9	36.1	36.7	38.0	39.9
		S/T	1.00	1.00	1.00	1.00	1.00	1.00	1.00	1.00	1.00	1.00	1.00	1.00	1.00	1.00	1.00	1.00	1.00	1.00	1.00	1.00	1.00	1.00	1.00	1.00
		ΔT	31.34	29.39	25.75	21.99	31.28	29.34	25.70	21.93	31.56	29.61	25.97	22.21	31.26	29.32	25.68	21.91	31.00	29.06	25.42	21.65	32.22	30.27	26.64	22.87
		KW	2.68	2.68	2.67	2.70	2.99	2.99	2.98	3.01	3.34	3.34	3.33	3.36	3.72	3.71	3.71	3.73	4.14	4.13	4.13	4.15	4.63	4.63	4.62	4.64
		Amps	9.59	9.58	9.56	9.66	10.94	10.93	10.91	11.01	12.45	12.44	12.42	12.52	14.09	14.08	14.06	14.16	15.92	15.91	15.88	15.99	18.06	18.05	18.03	18.13
		Hi PR	273	274	276	281	315	317	318	323	360	361	363	367	407	408	410	415	458	459	461	466	513	514	516	521
		Lo PR	131	132	135	141	138	140	143	148	145	146	149	155	150	152	155	160	156	157	161	166	163	164	167	173

IDB: Entering Indoor Dry Bulb Temperature

Shaded area reflects AHRI (TVA) conditions

kW = Total system power

High and low pressures are measured at the liquid and suction service valves.

Amps = outdoor unit amps (comp.+fan)

Expanded Cooling Data — GPGM548***41 Stage 1

			Outdoor Ambient Temperature																							
			65ºF				75ºF				85ºF				95ºF				105ºF				115ºF			
			Entering Indoor Wet Bulb Temperature																							
IDB	Airflow		59	63	67	71	59	63	67	71	59	63	67	71	59	63	67	71	59	63	67	71	59	63	67	71
70	805	MBh	33.7	34.2	35.2	-	33.4	33.9	34.9	-	32.5	33.0	34.0	-	31.0	31.5	32.5	-	29.1	29.6	30.6	-	27.5	27.9	28.9	-
		S/T	0.61	0.54	0.40	-	0.62	0.54	0.41	-	0.64	0.57	0.43	-	1.00	0.59	0.45	-	1.00	0.61	0.47	-	1.00	0.66	0.52	-
		ΔT	21.04	19.09	15.44	-	20.99	19.04	15.38	-	21.27	19.31	15.66	-	20.97	19.02	15.36	-	20.71	18.75	15.10	-	21.93	19.98	16.33	-
		KW	1.86	1.86	1.85	-	2.08	2.08	2.07	-	2.33	2.33	2.32	-	2.60	2.60	2.59	-	2.90	2.90	2.89	-	3.25	3.25	3.25	-
		Amps	6.70	6.69	6.68	-	7.67	7.66	7.65	-	8.75	8.75	8.73	-	9.93	9.92	9.90	-	11.24	11.23	11.21	-	12.77	12.76	12.75	-
		Hi PR	256	257	259	-	297	298	299	-	339	340	342	-	384	386	387	-	434	435	436	-	486	487	489	-
		Lo PR	126	127	130	-	133	135	138	-	140	142	145	-	146	147	150	-	151	153	156	-	158	160	163	-
	910	MBh	34.1	34.6	35.6	-	33.8	34.3	35.3	-	32.9	33.4	34.4	-	31.4	31.9	32.9	-	29.6	30.0	31.0	-	27.9	28.3	29.3	-
		S/T	0.67	0.59	0.45	-	0.67	0.60	0.46	-	0.70	0.62	0.49	-	1.00	0.64	0.51	-	1.00	0.66	0.53	-	1.00	0.71	0.58	-
		ΔT	19.96	18.01	14.36	-	19.91	17.95	14.30	-	20.18	18.23	14.58	-	19.89	17.93	14.28	-	19.63	17.67	14.02	-	20.85	18.90	15.25	-
		KW	1.87	1.87	1.86	-	2.09	2.09	2.09	-	2.34	2.34	2.33	-	2.61	2.61	2.60	-	2.91	2.91	2.90	-	3.26	3.26	3.26	-
		Amps	6.75	6.74	6.72	-	7.72	7.71	7.69	-	8.80	8.79	8.78	-	9.97	9.96	9.95	-	11.28	11.27	11.26	-	12.82	12.81	12.79	-
		Hi PR	258	259	261	-	299	300	301	-	341	342	344	-	386	388	389	-	436	437	438	-	488	489	491	-
		Lo PR	127	129	132	-	135	137	140	-	142	143	147	-	147	149	152	-	153	155	158	-	160	161	165	-
	1015	MBh	34.6	35.1	36.1	-	34.3	34.8	35.8	-	33.4	33.9	34.9	-	31.9	32.4	33.4	-	30.0	30.5	31.5	-	28.4	28.8	29.8	-
		S/T	0.70	0.62	0.49	-	0.70	0.63	0.49	-	1.00	0.65	0.52	-	1.00	0.67	0.54	-	1.00	0.70	0.56	-	1.00	0.75	0.61	-
		ΔT	19.04	17.08	13.43	-	18.99	17.03	13.38	-	19.26	17.31	13.66	-	18.97	17.01	13.36	-	18.71	16.75	13.10	-	19.93	17.97	14.32	-
		KW	1.88	1.87	1.87	-	2.10	2.10	2.09	-	2.35	2.35	2.34	-	2.62	2.62	2.61	-	2.92	2.92	2.91	-	3.27	3.27	3.27	-
		Amps	6.79	6.78	6.76	-	7.76	7.75	7.73	-	8.84	8.83	8.82	-	10.01	10.00	9.99	-	11.32	11.31	11.30	-	12.86	12.85	12.83	-
		Hi PR	260	261	263	-	300	302	303	-	343	344	346	-	388	389	391	-	438	439	440	-	490	491	493	-
		Lo PR	129	131	134	-	137	139	142	-	144	145	148	-	149	151	154	-	155	156	160	-	162	163	167	-
75	805	MBh	33.7	34.2	35.2	36.7	33.4	33.9	34.9	36.4	32.5	33.0	34.0	35.5	31.0	31.5	32.5	34.0	29.2	29.6	30.6	32.2	27.5	27.9	29.0	30.5
		S/T	0.74	0.67	0.53	0.39	1.00	0.67	0.54	0.39	1.00	0.70	0.56	0.42	1.00	0.72	0.58	0.44	1.00	0.74	0.60	0.46	1.00	1.00	0.65	0.51
		ΔT	25.34	23.39	19.74	15.95	25.29	23.34	19.68	15.90	25.57	23.61	19.96	16.18	25.27	23.32	19.66	15.88	25.01	23.05	19.40	15.62	26.23	24.28	20.63	16.84
		KW	1.86	1.85	1.85	1.87	2.08	2.08	2.07	2.09	2.33	2.33	2.32	2.34	2.60	2.60	2.59	2.61	2.90	2.90	2.89	2.91	3.25	3.25	3.25	3.26
		Amps	6.69	6.69	6.67	6.74	7.67	7.66	7.64	7.72	8.75	8.74	8.72	8.80	9.92	9.91	9.90	9.97	11.23	11.22	11.21	11.28	12.77	12.76	12.74	12.82
		Hi PR	256	257	259	264	297	298	300	304	339	340	342	346	385	386	388	392	434	435	437	441	486	487	489	494
		Lo PR	126	127	131	136	133	135	138	144	140	142	145	150	146	147	151	156	151	153	156	161	158	160	163	168
	910	MBh	34.1	34.6	35.6	37.1	33.8	34.3	35.3	36.8	32.9	33.4	34.4	35.9	31.4	**31.9**	32.9	34.4	29.6	30.0	31.1	32.6	27.9	28.4	29.4	30.9
		S/T	0.80	0.72	0.58	0.44	1.00	0.73	0.59	0.45	1.00	0.75	0.62	0.47	1.00	**0.77**	0.63	0.49	1.00	0.79	0.66	0.51	1.00	1.00	0.71	0.57
		ΔT	24.26	22.31	18.66	14.87	24.21	22.25	18.60	14.82	24.48	22.53	18.88	15.09	24.19	**22.23**	18.58	14.80	23.93	21.97	18.32	14.54	25.15	23.20	19.55	15.76
		KW	1.87	1.86	1.86	1.88	2.09	2.09	2.08	2.10	2.34	2.34	2.33	2.35	2.61	**2.61**	2.60	2.62	2.91	2.91	2.90	2.92	3.26	3.26	3.26	3.27
		Amps	6.74	6.73	6.72	6.79	7.71	7.70	7.69	7.76	8.79	8.79	8.77	8.84	9.97	**9.96**	9.94	10.02	11.28	11.27	11.25	11.33	12.81	12.80	12.79	12.86
		Hi PR	258	259	261	266	299	300	302	306	341	342	344	348	387	**388**	390	394	436	437	439	443	488	489	491	496
		Lo PR	127	129	132	138	135	137	140	145	142	143	147	152	147	**149**	152	158	153	155	158	163	160	162	165	170
	1015	MBh	34.6	35.1	36.1	37.6	34.3	34.8	35.8	37.3	33.4	33.9	34.9	36.4	31.9	32.4	33.4	34.9	30.1	30.5	31.5	33.1	28.4	28.8	29.9	31.4
		S/T	0.83	0.75	0.62	0.47	1.00	0.76	0.62	0.48	1.00	0.78	0.65	0.50	1.00	0.80	0.67	0.52	1.00	1.00	0.69	0.55	1.00	1.00	0.74	0.60
		ΔT	23.34	21.38	17.73	13.95	23.29	21.33	17.68	13.90	23.56	21.61	17.95	14.17	23.27	21.31	17.66	13.88	23.01	21.05	17.40	13.62	24.23	22.27	18.62	14.84
		KW	1.88	1.87	1.87	1.89	2.10	2.10	2.09	2.11	2.35	2.35	2.34	2.36	2.62	2.62	2.61	2.63	2.92	2.92	2.91	2.93	3.27	3.27	3.27	3.28
		Amps	6.78	6.77	6.76	6.83	7.75	7.74	7.73	7.80	8.83	8.83	8.81	8.88	10.01	10.00	9.98	10.06	11.31	11.31	11.29	11.36	12.85	12.84	12.83	12.90
		Hi PR	260	261	263	268	301	302	304	308	343	344	346	350	389	390	392	396	438	439	441	445	490	491	493	498
		Lo PR	129	131	134	139	137	139	142	147	144	145	148	154	149	151	154	159	155	156	160	165	162	163	167	172

IDB: Entering Indoor Dry Bulb Temperature

High and low pressures are measured at the liquid and suction service valves.

Shaded area reflects ACCA (TVA) conditions

kW = Total system power

Amps = outdoor unit amps (comp.+fan)

Expanded Cooling Data — GPGM548***41 Stage 1 (cont.)

			Outdoor Ambient Temperature																							
			65ºF				75ºF				85ºF				95ºF				105ºF				115ºF			
			Entering Indoor Wet Bulb Temperature																							
IDB	Airflow		59	63	67	71	59	63	67	71	59	63	67	71	59	63	67	71	59	63	67	71	59	63	67	71
80	805	MBh	33.9	34.3	35.4	36.9	33.6	34.0	35.1	36.6	32.7	33.2	34.2	35.7	31.2	31.7	32.7	34.2	29.3	29.8	30.8	32.4	27.6	28.1	29.1	30.7
		S/T	1.00	0.79	0.66	0.51	1.00	0.80	0.66	0.52	1.00	0.82	0.69	0.54	1.00	1.00	0.71	0.56	1.00	1.00	0.73	0.58	1.00	1.00	0.78	0.64
		ΔT	29.67	27.72	24.07	20.28	29.62	27.66	24.01	20.23	29.89	27.94	24.29	20.50	29.60	27.64	23.99	20.21	29.34	27.38	23.73	19.95	30.56	28.61	24.96	21.17
		KW	1.86	1.85	1.85	1.87	2.08	2.08	2.07	2.09	2.33	2.33	2.32	2.34	2.60	2.60	2.59	2.61	2.90	2.90	2.89	2.91	3.25	3.25	3.25	3.26
		Amps	6.70	6.69	6.68	6.75	7.67	7.66	7.65	7.72	8.75	8.75	8.73	8.80	9.92	9.92	9.90	9.97	11.23	11.23	11.21	11.28	12.77	12.76	12.75	12.82
		Hi PR	257	258	260	264	297	298	300	305	340	341	342	347	385	386	388	392	434	435	437	442	487	488	490	494
		Lo PR	126	128	131	136	134	136	139	144	141	142	145	151	146	148	151	156	152	153	157	162	159	160	164	169
	910	MBh	34.3	34.8	35.8	37.3	34.0	34.5	35.5	37.0	33.1	33.6	34.6	36.1	31.6	32.1	**33.1**	34.6	29.7	30.2	31.2	32.8	28.1	28.5	29.5	31.1
		S/T	1.00	0.85	0.71	0.57	1.00	0.85	0.72	0.57	1.00	0.88	0.74	0.60	1.00	1.00	**0.76**	0.62	1.00	1.00	0.78	0.64	1.00	1.00	0.83	0.69
		ΔT	28.59	26.64	22.98	19.20	28.54	26.58	22.93	19.15	28.81	26.86	23.21	19.42	28.52	26.56	**22.91**	19.13	28.26	26.30	22.65	18.87	29.48	27.53	23.87	20.09
		KW	1.87	1.87	1.86	1.88	2.09	2.09	2.08	2.10	2.34	2.34	2.33	2.35	2.61	2.61	**2.60**	2.62	2.91	2.91	2.90	2.92	3.26	3.26	3.26	3.28
		Amps	6.75	6.74	6.72	6.80	7.72	7.71	7.69	7.77	8.80	8.79	8.77	8.85	9.97	9.96	**9.95**	10.02	11.28	11.27	11.26	11.33	12.82	12.81	12.79	12.87
		Hi PR	259	260	262	266	299	300	302	307	342	343	344	349	387	388	**390**	395	436	437	439	444	489	490	492	496
		Lo PR	128	130	133	138	136	137	140	146	142	144	147	152	148	150	**153**	158	154	155	158	164	161	162	165	171
	1015	MBh	34.8	35.2	36.3	37.8	34.5	34.9	36.0	37.5	33.6	34.1	35.1	36.6	32.1	32.6	33.6	35.1	30.2	30.7	31.7	33.2	28.5	29.0	30.0	31.6
		S/T	1.00	0.88	0.74	0.60	1.00	0.88	0.75	0.60	1.00	1.00	0.77	0.63	1.00	1.00	0.79	0.65	1.00	1.00	0.81	0.67	1.00	1.00	1.00	0.72
		ΔT	27.67	25.71	22.06	18.28	27.62	25.66	22.01	18.23	27.89	25.93	22.28	18.50	27.60	25.64	21.99	18.21	27.33	25.38	21.73	17.94	28.56	26.60	22.95	19.17
		KW	1.88	1.87	1.87	1.89	2.10	2.10	2.09	2.11	2.35	2.35	2.34	2.36	2.62	2.62	2.61	2.63	2.92	2.92	2.91	2.93	3.27	3.27	3.27	3.28
		Amps	6.79	6.78	6.76	6.84	7.76	7.75	7.73	7.81	8.84	8.83	8.81	8.89	10.01	10.00	9.99	10.06	11.32	11.31	11.30	11.37	12.86	12.85	12.83	12.91
		Hi PR	261	262	264	268	301	302	304	309	344	345	346	351	389	390	392	396	438	439	441	446	491	492	494	498
		Lo PR	130	131	135	140	138	139	142	148	144	146	149	154	150	151	155	160	155	157	160	166	162	164	167	173
85	805	MBh	34.4	34.9	35.9	37.5	34.1	34.6	35.6	37.2	33.3	33.7	34.7	36.3	31.7	32.2	33.2	34.8	29.9	30.4	31.4	32.9	28.2	28.7	29.7	31.2
		S/T	1.00	0.89	0.76	0.61	1.00	1.00	0.76	0.62	1.00	1.00	0.79	0.64	1.00	1.00	0.81	0.66	1.00	1.00	1.00	0.69	1.00	1.00	1.00	0.74
		ΔT	33.51	31.56	27.91	24.12	33.46	31.50	27.85	24.07	33.73	31.78	28.13	24.34	33.44	31.48	27.83	24.05	33.18	31.22	27.57	23.79	34.40	32.45	28.79	25.01
		KW	1.86	1.86	1.86	1.87	2.08	2.08	2.08	2.10	2.33	2.33	2.33	2.34	2.60	2.60	2.60	2.61	2.90	2.90	2.90	2.92	3.26	3.26	3.25	3.27
		Amps	6.72	6.71	6.69	6.77	7.69	7.68	7.66	7.74	8.77	8.76	8.75	8.82	9.94	9.94	9.92	9.99	11.25	11.25	11.23	11.30	12.79	12.78	12.76	12.84
		Hi PR	258	259	261	265	298	300	301	306	341	342	344	348	386	387	389	394	435	437	438	443	488	489	491	495
		Lo PR	128	130	133	138	136	137	141	146	143	144	147	153	148	150	153	158	154	155	158	164	161	162	165	171
	910	MBh	34.9	35.3	36.3	37.9	34.6	35.0	36.0	37.6	33.7	34.1	35.2	36.7	32.2	32.6	33.6	35.2	30.3	30.8	31.8	33.3	28.6	29.1	30.1	31.6
		S/T	1.00	0.95	0.81	0.67	1.00	1.00	0.82	0.67	1.00	1.00	0.84	0.70	1.00	1.00	0.86	0.72	1.00	1.00	1.00	0.74	1.00	1.00	1.00	0.79
		ΔT	32.43	30.47	26.82	23.04	32.38	30.42	26.77	22.99	32.65	30.70	27.05	23.26	32.36	30.40	26.75	22.97	32.10	30.14	26.49	22.71	33.32	31.36	27.71	23.93
		KW	1.87	1.87	1.87	1.88	2.09	2.09	2.09	2.11	2.34	2.34	2.34	2.36	2.61	2.61	2.61	2.62	2.91	2.91	2.91	2.93	3.27	3.27	3.26	3.28
		Amps	6.76	6.76	6.74	6.81	7.73	7.73	7.71	7.78	8.82	8.81	8.79	8.87	9.99	9.98	9.97	10.04	11.30	11.29	11.27	11.35	12.84	12.83	12.81	12.89
		Hi PR	260	261	263	267	300	302	303	308	343	344	346	350	388	389	391	396	437	439	440	445	490	491	493	497
		Lo PR	130	131	135	140	138	139	142	148	144	146	149	154	150	151	155	160	155	157	160	166	162	164	167	173
	1015	MBh	35.3	35.8	36.8	38.4	35.0	35.5	36.5	38.1	34.2	34.6	35.6	37.2	32.6	33.1	34.1	35.7	30.8	31.3	32.3	33.8	29.1	29.6	30.6	32.1
		S/T	1.00	0.98	0.84	0.70	1.00	1.00	0.85	0.71	1.00	1.00	0.87	0.73	1.00	1.00	0.89	0.75	1.00	1.00	1.00	0.77	1.00	1.00	1.00	0.82
		ΔT	31.51	29.55	25.90	22.12	31.45	29.50	25.85	22.06	31.73	29.77	26.12	22.34	31.43	29.48	25.83	22.04	31.17	29.22	25.57	21.78	32.40	30.44	26.79	23.01
		KW	1.88	1.88	1.88	1.89	2.10	2.10	2.10	2.12	2.35	2.35	2.35	2.36	2.62	2.62	2.62	2.63	2.92	2.92	2.92	2.94	3.28	3.28	3.27	3.29
		Amps	6.80	6.80	6.78	6.85	7.77	7.77	7.75	7.82	8.86	8.85	8.83	8.91	10.03	10.02	10.00	10.08	11.34	11.33	11.31	11.39	12.87	12.87	12.85	12.92
		Hi PR	262	263	265	269	302	304	305	310	345	346	348	352	390	391	393	398	439	441	442	447	492	493	495	499
		Lo PR	132	133	137	142	139	141	144	150	146	148	151	156	152	153	157	162	157	159	162	167	164	166	169	174

IDB: Entering Indoor Dry Bulb Temperature

Shaded area reflects AHRI (TVA) conditions

kW = Total system power

High and low pressures are measured at the liquid and suction service valves.

Amps = outdoor unit amps (comp.+fan)

Expanded Cooling Data — GPGM548***41 Stage 2

			Outdoor Ambient Temperature																							
			65ºF				75ºF				85ºF				95ºF				105ºF				115ºF			
			Entering Indoor Wet Bulb Temperature																							
IDB	Airflow		59	63	67	71	59	63	67	71	59	63	67	71	59	63	67	71	59	63	67	71	59	63	67	71
70	1150	MBh	46.8	47.5	48.9	-	46.4	47.1	48.5	-	45.2	45.9	47.3	-	43.1	43.8	45.2	-	40.5	41.2	42.6	-	38.2	38.8	40.2	-
		S/T	0.60	0.52	0.39	-	0.60	0.53	0.40	-	0.63	0.55	0.42	-	0.65	0.57	0.44	-	1.00	0.59	0.46	-	1.00	0.64	0.51	-
		ΔT	21.81	19.78	16.00	-	21.75	19.73	15.94	-	22.04	20.01	16.23	-	21.73	19.71	15.92	-	21.46	19.43	15.65	-	22.73	20.70	16.92	-
		KW	2.95	2.95	2.94	-	3.31	3.30	3.30	-	3.70	3.70	3.69	-	4.13	4.13	4.12	-	4.61	4.61	4.60	-	5.17	5.17	5.16	-
		Amps	10.65	10.64	10.62	-	12.20	12.18	12.16	-	13.92	13.91	13.88	-	15.78	15.77	15.74	-	17.86	17.85	17.82	-	20.30	20.29	20.27	-
		Hi PR	268	269	271	-	310	311	313	-	354	356	358	-	402	403	405	-	454	455	457	-	508	510	511	-
		Lo PR	122	124	127	-	130	131	134	-	136	138	141	-	142	143	146	-	147	149	152	-	154	155	159	-
	1300	MBh	47.4	48.1	49.5	-	47.0	47.7	49.1	-	45.8	46.4	47.8	-	43.7	44.3	45.7	-	41.1	41.8	43.2	-	38.8	39.4	40.8	-
		S/T	0.65	0.57	0.44	-	0.66	0.58	0.45	-	0.68	0.61	0.47	-	1.00	0.62	0.49	-	1.00	0.65	0.51	-	1.00	0.70	0.56	-
		ΔT	20.69	18.66	14.88	-	20.63	18.61	14.82	-	20.92	18.89	15.11	-	20.61	18.58	14.80	-	20.34	18.31	14.53	-	21.61	19.58	15.80	-
		KW	2.97	2.97	2.96	-	3.32	3.32	3.32	-	3.72	3.72	3.71	-	4.15	4.15	4.14	-	4.63	4.62	4.62	-	5.19	5.19	5.18	-
		Amps	10.73	10.71	10.69	-	12.27	12.26	12.23	-	13.99	13.98	13.95	-	15.85	15.84	15.82	-	17.94	17.92	17.90	-	20.38	20.37	20.34	-
		Hi PR	270	271	273	-	312	313	315	-	357	358	360	-	404	405	407	-	456	457	459	-	510	512	513	-
		Lo PR	124	125	129	-	131	133	136	-	138	139	143	-	143	145	148	-	149	150	153	-	156	157	160	-
	1450	MBh	48.1	48.8	50.2	-	47.7	48.3	49.7	-	46.5	47.1	48.5	-	44.3	45.0	46.4	-	41.8	42.4	43.8	-	39.4	40.1	41.5	-
		S/T	0.68	0.61	0.47	-	0.69	0.61	0.48	-	0.71	0.64	0.50	-	1.00	0.66	0.52	-	1.00	0.68	0.55	-	1.00	0.73	0.60	-
		ΔT	19.73	17.70	13.92	-	19.68	17.65	13.87	-	19.96	17.93	14.15	-	19.65	17.63	13.84	-	19.38	17.36	13.57	-	20.65	18.63	14.84	-
		KW	2.98	2.98	2.97	-	3.34	3.34	3.33	-	3.73	3.73	3.73	-	4.16	4.16	4.15	-	4.64	4.64	4.63	-	5.20	5.20	5.19	-
		Amps	10.79	10.78	10.75	-	12.33	12.32	12.29	-	14.05	14.04	14.01	-	15.92	15.90	15.88	-	18.00	17.99	17.96	-	20.44	20.43	20.40	-
		Hi PR	272	273	275	-	314	315	317	-	359	360	362	-	406	407	409	-	458	459	461	-	512	514	516	-
		Lo PR	126	127	130	-	133	135	138	-	140	141	144	-	145	147	150	-	151	152	155	-	157	159	162	-
75	1150	MBh	46.9	47.5	48.9	51.1	46.5	47.1	48.5	50.6	45.2	45.9	47.3	49.4	43.1	43.8	45.2	47.3	40.6	41.2	42.6	44.8	38.2	38.9	40.3	42.4
		S/T	0.72	0.65	0.52	0.38	0.73	0.65	0.52	0.38	1.00	0.68	0.55	0.41	1.00	0.70	0.57	0.43	1.00	0.72	0.59	0.45	1.00	1.00	0.64	0.50
		ΔT	26.26	24.24	20.45	16.53	26.21	24.18	20.40	16.48	26.49	24.47	20.68	16.76	26.19	24.16	20.38	16.46	25.92	23.89	20.11	16.19	27.19	25.16	21.38	17.46
		KW	2.95	2.95	2.94	2.97	3.30	3.30	3.30	3.32	3.70	3.70	3.69	3.72	4.13	4.13	4.12	4.15	4.61	4.61	4.60	4.63	5.17	5.17	5.16	5.19
		Amps	10.64	10.63	10.61	10.72	12.19	12.17	12.15	12.27	13.91	13.90	13.87	13.99	15.77	15.76	15.73	15.85	17.85	17.84	17.81	17.93	20.29	20.28	20.26	20.37
		Hi PR	268	269	271	276	310	312	313	318	355	356	358	362	402	404	405	410	454	455	457	461	509	510	512	516
		Lo PR	122	124	127	132	130	131	134	140	136	138	141	146	142	143	146	152	147	149	152	157	154	155	159	164
	1300	MBh	47.4	48.1	49.5	51.6	47.0	47.7	49.1	51.2	45.8	46.5	47.9	50.0	43.7	**44.4**	45.8	47.9	41.1	41.8	43.2	45.3	38.8	39.4	40.8	43.0
		S/T	0.77	0.70	0.57	0.43	0.78	0.71	0.57	0.44	1.00	0.73	0.60	0.46	1.00	**0.75**	0.62	0.48	1.00	0.77	0.64	0.50	1.00	1.00	0.69	0.55
		ΔT	25.14	23.12	19.33	15.41	25.09	23.06	19.28	15.36	25.37	23.35	19.56	15.64	25.07	**23.04**	19.26	15.34	24.80	22.77	18.99	15.07	26.06	24.04	20.25	16.33
		KW	2.97	2.96	2.96	2.99	3.32	3.32	3.31	3.34	3.72	3.71	3.71	3.74	4.15	**4.14**	4.14	4.16	4.62	4.62	4.62	4.64	5.19	5.18	5.18	5.20
		Amps	10.72	10.70	10.68	10.80	12.26	12.25	12.22	12.34	13.98	13.97	13.94	14.06	15.84	**15.83**	15.81	15.92	17.93	17.91	17.89	18.01	20.37	20.36	20.33	20.45
		Hi PR	270	271	273	278	313	314	316	320	357	358	360	365	404	**406**	407	412	456	457	459	464	511	512	514	518
		Lo PR	124	126	129	134	131	133	136	141	138	139	143	148	143	**145**	148	153	149	150	153	159	156	157	160	165
	1450	MBh	48.1	48.8	50.2	52.3	47.7	48.4	49.8	51.9	46.5	47.1	48.5	50.7	44.4	45.0	46.4	48.6	41.8	42.5	43.9	46.0	39.5	40.1	41.5	43.7
		S/T	0.81	0.73	0.60	0.46	1.00	0.74	0.61	0.47	1.00	0.76	0.63	0.49	1.00	0.78	0.65	0.51	1.00	0.80	0.67	0.53	1.00	1.00	0.72	0.58
		ΔT	24.19	22.16	18.38	14.46	24.13	22.10	18.32	14.40	24.42	22.39	18.61	14.69	24.11	22.08	18.30	14.38	23.84	21.81	18.03	14.11	25.11	23.08	19.30	15.38
		KW	2.98	2.98	2.97	3.00	3.34	3.33	3.33	3.35	3.73	3.73	3.72	3.75	4.16	4.16	4.15	4.18	4.64	4.64	4.63	4.66	5.20	5.20	5.19	5.22
		Amps	10.78	10.77	10.74	10.86	12.32	12.31	12.28	12.40	14.04	14.03	14.00	14.12	15.91	15.89	15.87	15.99	17.99	17.98	17.95	18.07	20.43	20.42	20.39	20.51
		Hi PR	272	273	275	280	315	316	318	322	359	360	362	367	406	408	410	414	458	459	461	466	513	514	516	520
		Lo PR	126	127	130	136	133	135	138	143	140	141	144	150	145	147	150	155	151	152	155	160	157	159	162	167

IDB: Entering Indoor Dry Bulb Temperature

High and low pressures are measured at the liquid and suction service valves.

Shaded area reflects ACCA (TVA) conditions

kW = Total system power

Amps = outdoor unit amps (comp.+fan)

Expanded Cooling Data — GPGM548***41 Stage 2 (cont.)

			Outdoor Ambient Temperature																							
			65ºF				75ºF				85ºF				95ºF				105ºF				115ºF			
			Entering Indoor Wet Bulb Temperature																							
IDB	Airflow		59	63	67	71	59	63	67	71	59	63	67	71	59	63	67	71	59	63	67	71	59	63	67	71
80	1150	MBh	47.1	47.8	49.2	51.3	46.7	47.4	48.8	50.9	45.5	46.1	47.5	49.7	43.4	44.0	45.4	47.6	40.8	41.5	42.9	45.0	38.5	39.1	40.5	42.6
		S/T	1.00	0.77	0.64	0.50	1.00	0.78	0.64	0.50	1.00	0.80	0.67	0.53	1.00	0.82	0.69	0.55	1.00	1.00	0.71	0.57	1.00	1.00	0.76	0.62
		ΔT	30.75	28.72	24.94	21.02	30.69	28.67	24.88	20.96	30.98	28.95	25.17	21.25	30.67	28.65	24.86	20.94	30.40	28.38	24.59	20.67	31.67	29.64	25.86	21.94
		KW	2.95	2.95	2.94	2.97	3.31	3.30	3.30	3.32	3.70	3.70	3.69	3.72	4.13	4.13	4.12	4.15	4.61	4.61	4.60	4.63	5.17	5.17	5.16	5.19
		Amps	10.65	10.64	10.61	10.73	12.19	12.18	12.16	12.27	13.92	13.90	13.88	14.00	15.78	15.77	15.74	15.86	17.86	17.85	17.82	17.94	20.30	20.29	20.26	20.38
		Hi PR	269	270	272	276	311	312	314	319	355	356	358	363	403	404	406	411	454	455	457	462	509	510	512	517
		Lo PR	123	124	127	133	130	132	135	140	137	138	141	147	142	144	147	152	148	149	152	158	154	156	159	164
	1300	MBh	47.7	48.3	49.7	51.9	47.3	47.9	49.3	51.5	46.0	46.7	48.1	50.2	43.9	44.6	**46.0**	48.1	41.4	42.0	43.4	45.6	39.0	39.7	41.1	43.2
		S/T	1.00	0.82	0.69	0.55	1.00	0.83	0.70	0.56	1.00	0.85	0.72	0.58	1.00	1.00	**0.74**	0.60	1.00	1.00	0.76	0.62	1.00	1.00	0.81	0.67
		ΔT	29.63	27.60	23.82	19.90	29.57	27.55	23.76	19.84	29.86	27.83	24.05	20.13	29.55	27.53	**23.74**	19.82	29.28	27.25	23.47	19.55	30.55	28.52	24.74	20.82
		KW	2.97	2.97	2.96	2.99	3.32	3.32	3.31	3.34	3.72	3.72	3.71	3.74	4.15	4.15	**4.14**	4.17	4.63	4.62	4.62	4.65	5.19	5.19	5.18	5.21
		Amps	10.73	10.71	10.69	10.80	12.27	12.26	12.23	12.35	13.99	13.98	13.95	14.07	15.85	15.84	**15.81**	15.93	17.93	17.92	17.90	18.01	20.38	20.36	20.34	20.46
		Hi PR	271	272	274	278	313	314	316	321	357	358	360	365	405	406	**408**	413	456	457	459	464	511	512	514	519
		Lo PR	125	126	129	134	132	133	137	142	138	140	143	148	144	145	**149**	154	149	151	154	159	156	158	161	166
	1450	MBh	48.4	49.0	50.4	52.6	47.9	48.6	50.0	52.1	46.7	47.4	48.8	50.9	44.6	45.3	46.7	48.8	42.0	42.7	44.1	46.2	39.7	40.4	41.8	43.9
		S/T	1.00	0.85	0.72	0.58	1.00	0.86	0.73	0.59	1.00	0.88	0.75	0.61	1.00	1.00	0.77	0.63	1.00	1.00	0.79	0.65	1.00	1.00	0.84	0.70
		ΔT	28.67	26.65	22.86	18.94	28.62	26.59	22.81	18.89	28.90	26.87	23.09	19.17	28.60	26.57	22.79	18.87	28.33	26.30	22.52	18.60	29.59	27.57	23.78	19.86
		KW	2.98	2.98	2.97	3.00	3.34	3.34	3.33	3.36	3.73	3.73	3.72	3.75	4.16	4.16	4.15	4.18	4.64	4.64	4.63	4.66	5.20	5.20	5.19	5.22
		Amps	10.79	10.78	10.75	10.87	12.33	12.32	12.29	12.41	14.05	14.04	14.01	14.13	15.91	15.90	15.88	15.99	18.00	17.98	17.96	18.08	20.44	20.43	20.40	20.52
		Hi PR	273	274	276	281	315	316	318	323	359	360	362	367	407	408	410	415	458	460	461	466	513	514	516	521
		Lo PR	126	128	131	136	134	135	138	144	140	142	145	150	146	147	150	156	151	153	156	161	158	159	163	168
85	1150	MBh	47.9	48.6	50.0	52.1	47.5	48.1	49.5	51.7	46.3	46.9	48.3	50.5	44.2	44.8	46.2	48.4	41.6	42.2	43.6	45.8	39.2	39.9	41.3	43.4
		S/T	1.00	0.87	0.74	0.60	1.00	0.87	0.74	0.60	1.00	1.00	0.77	0.63	1.00	1.00	0.79	0.65	1.00	1.00	0.81	0.67	1.00	1.00	1.00	0.72
		ΔT	34.73	32.70	28.92	25.00	34.67	32.65	28.86	24.94	34.96	32.93	29.15	25.23	34.65	32.62	28.84	24.92	34.38	32.35	28.57	24.65	35.65	33.62	29.84	25.92
		KW	2.96	2.96	2.95	2.98	3.31	3.31	3.30	3.33	3.71	3.71	3.70	3.73	4.14	4.14	4.13	4.16	4.62	4.61	4.61	4.64	5.18	5.18	5.17	5.20
		Amps	10.68	10.67	10.64	10.76	12.22	12.21	12.19	12.30	13.95	13.93	13.91	14.02	15.81	15.80	15.77	15.89	17.89	17.88	17.85	17.97	20.33	20.32	20.29	20.41
		Hi PR	270	271	273	278	312	313	315	320	356	358	359	364	404	405	407	412	456	457	459	463	510	512	513	518
		Lo PR	125	126	129	135	132	134	137	142	139	140	143	148	144	146	149	154	150	151	154	159	156	158	161	166
	1300	MBh	48.5	49.1	50.5	52.7	48.1	48.7	50.1	52.2	46.8	47.5	48.9	51.0	44.7	45.4	46.8	48.9	42.2	42.8	44.2	46.4	39.8	40.5	41.9	44.0
		S/T	1.00	0.92	0.79	0.65	1.00	0.93	0.80	0.66	1.00	1.00	0.82	0.68	1.00	1.00	0.84	0.70	1.00	1.00	0.86	0.72	1.00	1.00	1.00	0.77
		ΔT	33.61	31.58	27.80	23.88	33.55	31.52	27.74	23.82	33.84	31.81	28.03	24.11	33.53	31.50	27.72	23.80	33.26	31.23	27.45	23.53	34.53	32.50	28.72	24.80
		KW	2.98	2.97	2.97	2.99	3.33	3.33	3.32	3.35	3.73	3.72	3.72	3.74	4.15	4.15	4.15	4.17	4.63	4.63	4.62	4.65	5.20	5.19	5.19	5.21
		Amps	10.75	10.74	10.72	10.83	12.30	12.28	12.26	12.38	14.02	14.01	13.98	14.10	15.88	15.87	15.84	15.96	17.96	17.95	17.92	18.04	20.41	20.39	20.37	20.49
		Hi PR	272	273	275	280	314	315	317	322	359	360	362	366	406	407	409	414	458	459	461	465	512	514	515	520
		Lo PR	126	128	131	136	134	135	138	144	140	142	145	150	146	147	150	156	151	153	156	161	158	159	163	168
	1450	MBh	49.1	49.8	51.2	53.3	48.7	49.4	50.8	52.9	47.5	48.2	49.6	51.7	45.4	46.1	47.5	49.6	42.8	43.5	44.9	47.0	40.5	41.2	42.5	44.7
		S/T	1.00	0.95	0.82	0.68	1.00	1.00	0.83	0.69	1.00	1.00	0.85	0.71	1.00	1.00	0.87	0.73	1.00	1.00	0.89	0.75	1.00	1.00	1.00	0.80
		ΔT	32.65	30.62	26.84	22.92	32.60	30.57	26.79	22.87	32.88	30.85	27.07	23.15	32.57	30.55	26.76	22.84	32.30	30.28	26.49	22.57	33.57	31.55	27.76	23.84
		KW	2.99	2.99	2.98	3.01	3.34	3.34	3.34	3.36	3.74	3.74	3.73	3.76	4.17	4.17	4.16	4.19	4.65	4.65	4.64	4.67	5.21	5.21	5.20	5.23
		Amps	10.82	10.80	10.78	10.90	12.36	12.35	12.32	12.44	14.08	14.07	14.04	14.16	15.94	15.93	15.91	16.02	18.03	18.01	17.99	18.11	20.47	20.46	20.43	20.55
		Hi PR	274	275	277	282	316	317	319	324	361	362	364	368	408	409	411	416	460	461	463	467	514	516	518	522
		Lo PR	128	130	133	138	136	137	140	145	142	144	147	152	148	149	152	157	153	155	158	163	160	161	164	170

IDB: Entering Indoor Dry Bulb Temperature

Shaded area reflects AHRI (TVA) conditions

kW = Total system power

High and low pressures are measured at the liquid and suction service valves.

Amps = outdoor unit amps (comp.+fan)

Expanded Cooling Data — GPGM560***41 Stage 1

			Outdoor Ambient Temperature																							
			65ºF				75ºF				85ºF				95ºF				105ºF				115ºF			
			Entering Indoor Wet Bulb Temperature																							
IDB	Airflow		59	63	67	71	59	63	67	71	59	63	67	71	59	63	67	71	59	63	67	71	59	63	67	71
70	1120	MBh	42.5	43.1	44.4	-	42.1	42.7	44.0	-	41.0	41.6	42.9	-	39.1	39.7	41.0	-	36.8	37.4	38.6	-	34.6	35.2	36.5	-
		S/T	0.61	0.53	0.40	-	0.61	0.54	0.40	-	0.64	0.56	0.43	-	1.00	0.58	0.45	-	1.00	0.60	0.47	-	1.00	0.65	0.52	-
		ΔT	18.92	17.15	13.87	-	18.87	17.11	13.82	-	19.12	17.35	14.07	-	18.85	17.09	13.80	-	18.61	16.85	13.56	-	19.72	17.96	14.67	-
		KW	2.32	2.31	2.31	-	2.61	2.60	2.60	-	2.93	2.93	2.92	-	3.28	3.28	3.27	-	3.67	3.67	3.66	-	4.13	4.12	4.12	-
		Amps	8.38	8.37	8.35	-	9.64	9.63	9.61	-	11.04	11.03	11.01	-	12.56	12.55	12.53	-	14.26	14.25	14.23	-	16.25	16.24	16.22	-
		Hi PR	257	258	260	-	298	299	301	-	340	342	343	-	386	387	389	-	436	437	438	-	488	489	491	-
		Lo PR	127	129	132	-	135	136	140	-	142	143	146	-	147	149	152	-	153	155	158	-	160	162	165	-
	1260	MBh	43.0	43.6	44.9	-	42.6	43.2	44.5	-	41.5	42.1	43.4	-	39.6	40.2	41.5	-	37.3	37.9	39.1	-	35.1	35.7	37.0	-
		S/T	0.66	0.58	0.45	-	0.66	0.59	0.45	-	1.00	0.61	0.48	-	1.00	0.63	0.50	-	1.00	0.65	0.52	-	1.00	0.71	0.57	-
		ΔT	17.98	16.22	12.93	-	17.93	16.17	12.88	-	18.18	16.42	13.13	-	17.92	16.15	12.87	-	17.68	15.92	12.63	-	18.78	17.02	13.73	-
		KW	2.33	2.33	2.32	-	2.62	2.62	2.61	-	2.94	2.94	2.93	-	3.29	3.29	3.28	-	3.68	3.68	3.67	-	4.14	4.14	4.13	-
		Amps	8.44	8.43	8.41	-	9.70	9.69	9.66	-	11.10	11.09	11.07	-	12.62	12.61	12.59	-	14.32	14.31	14.28	-	16.31	16.30	16.27	-
		Hi PR	259	260	262	-	300	301	303	-	342	343	345	-	388	389	391	-	437	439	440	-	490	491	493	-
		Lo PR	129	130	134	-	137	138	141	-	143	145	148	-	149	151	154	-	155	156	159	-	162	163	166	-
	1400	MBh	43.6	44.2	45.4	-	43.2	43.8	45.1	-	42.1	42.7	44.0	-	40.2	40.8	42.0	-	37.8	38.4	39.7	-	35.7	36.3	37.6	-
		S/T	0.69	0.61	0.48	-	0.69	0.62	0.49	-	1.00	0.64	0.51	-	1.00	0.66	0.53	-	1.00	0.69	0.55	-	1.00	1.00	0.60	-
		ΔT	17.18	15.42	12.13	-	17.13	15.37	12.08	-	17.38	15.62	12.33	-	17.11	15.35	12.06	-	16.88	15.12	11.83	-	17.98	16.22	12.93	-
		KW	2.34	2.34	2.33	-	2.63	2.63	2.62	-	2.95	2.95	2.95	-	3.30	3.30	3.30	-	3.69	3.69	3.69	-	4.15	4.15	4.14	-
		Amps	8.49	8.48	8.46	-	9.75	9.74	9.71	-	11.15	11.14	11.12	-	12.67	12.66	12.64	-	14.36	14.35	14.33	-	16.36	16.35	16.32	-
		Hi PR	261	262	264	-	302	303	305	-	344	345	347	-	390	391	393	-	439	440	442	-	492	493	495	-
		Lo PR	131	132	135	-	138	140	143	-	145	147	150	-	151	152	156	-	156	158	161	-	164	165	168	-
75	1120	MBh	42.5	43.1	44.4	46.3	42.1	42.7	44.0	45.9	41.0	41.6	42.9	44.8	39.1	39.7	41.0	42.9	36.8	37.4	38.7	40.6	34.7	35.3	36.5	38.5
		S/T	0.73	0.66	0.52	0.38	1.00	0.66	0.53	0.39	1.00	0.69	0.56	0.41	1.00	0.71	0.57	0.43	1.00	0.73	0.60	0.46	1.00	1.00	0.65	0.51
		ΔT	22.79	21.03	17.74	14.33	22.74	20.98	17.69	14.28	22.99	21.23	17.94	14.53	22.72	20.96	17.67	14.27	22.49	20.73	17.44	14.03	23.59	21.83	18.54	15.13
		KW	2.31	2.31	2.31	2.33	2.60	2.60	2.60	2.62	2.93	2.92	2.92	2.94	3.28	3.27	3.27	3.29	3.67	3.66	3.66	3.68	4.12	4.12	4.12	4.14
		Amps	8.37	8.36	8.34	8.44	9.63	9.62	9.60	9.70	11.03	11.02	11.00	11.10	12.55	12.54	12.52	12.62	14.25	14.24	14.22	14.31	16.24	16.23	16.21	16.31
		Hi PR	258	259	260	265	298	299	301	306	341	342	344	348	386	388	389	394	436	437	439	443	488	490	491	496
		Lo PR	127	129	132	137	135	136	140	145	142	143	146	152	147	149	152	158	153	155	158	163	160	162	165	170
	1260	MBh	43.0	43.6	44.9	46.8	42.6	43.2	44.5	46.4	41.5	42.1	43.4	45.3	39.6	**40.2**	41.5	43.4	37.3	37.9	39.2	41.1	35.2	35.8	37.0	39.0
		S/T	0.79	0.71	0.58	0.43	1.00	0.72	0.58	0.44	1.00	0.74	0.61	0.47	1.00	**0.76**	0.63	0.48	1.00	1.00	0.65	0.51	1.00	1.00	0.70	0.56
		ΔT	21.85	20.09	16.80	13.40	21.81	20.04	16.76	13.35	22.05	20.29	17.00	13.60	21.79	**20.03**	16.74	13.33	21.55	19.79	16.50	13.10	22.66	20.89	17.61	14.20
		KW	2.33	2.33	2.32	2.34	2.62	2.61	2.61	2.63	2.94	2.94	2.93	2.95	3.29	**3.29**	3.28	3.30	3.68	3.68	3.67	3.69	4.14	4.14	4.13	4.15
		Amps	8.43	8.42	8.40	8.50	9.69	9.68	9.66	9.75	11.09	11.08	11.06	11.16	12.61	**12.60**	12.58	12.68	14.31	14.30	14.28	14.37	16.30	16.29	16.27	16.36
		Hi PR	260	261	262	267	300	301	303	307	343	344	346	350	388	**389**	391	396	438	439	441	445	490	491	493	498
		Lo PR	129	130	134	139	137	138	141	147	143	145	148	154	149	**151**	154	159	155	156	159	165	162	163	167	172
	1400	MBh	43.6	44.2	45.5	47.4	43.2	43.8	45.1	47.0	42.1	42.7	44.0	45.9	40.2	40.8	42.1	44.0	37.9	38.5	39.7	41.7	35.7	36.3	37.6	39.6
		S/T	0.82	0.74	0.61	0.47	1.00	0.75	0.61	0.47	1.00	0.77	0.64	0.50	1.00	0.79	0.66	0.52	1.00	1.00	0.68	0.54	1.00	1.00	0.73	0.59
		ΔT	21.05	19.29	16.00	12.59	21.00	19.24	15.95	12.55	21.25	19.49	16.20	12.79	20.99	19.22	15.94	12.53	20.75	18.99	15.70	12.29	21.85	20.09	16.80	13.40
		KW	2.34	2.34	2.33	2.35	2.63	2.63	2.62	2.64	2.95	2.95	2.94	2.97	3.30	3.30	3.29	3.32	3.69	3.69	3.68	3.71	4.15	4.15	4.14	4.16
		Amps	8.48	8.47	8.45	8.54	9.74	9.73	9.71	9.80	11.14	11.13	11.11	11.21	12.66	12.65	12.63	12.72	14.36	14.35	14.32	14.42	16.35	16.34	16.32	16.41
		Hi PR	261	263	264	269	302	303	305	309	344	346	347	352	390	391	393	398	440	441	442	447	492	493	495	500
		Lo PR	131	132	135	141	138	140	143	149	145	147	150	155	151	152	156	161	157	158	161	167	164	165	168	174

IDB: Entering Indoor Dry Bulb Temperature

High and low pressures are measured at the liquid and suction service valves.

Shaded area reflects ACCA (TVA) conditions

kW = Total system power

Amps = outdoor unit amps (comp.+fan)

Expanded Cooling Data — GPGM560***41 Stage 1 (cont.)

			Outdoor Ambient Temperature																							
			65ºF				75ºF				85ºF				95ºF				105ºF				115ºF			
			Entering Indoor Wet Bulb Temperature																							
IDB	Airflow		59	63	67	71	59	63	67	71	59	63	67	71	59	63	67	71	59	63	67	71	59	63	67	71
80	1120	MBh	42.7	43.3	44.6	46.5	42.3	42.9	44.2	46.2	41.2	41.8	43.1	45.0	39.3	39.9	41.2	43.1	37.0	37.6	38.9	40.8	34.9	35.5	36.7	38.7
		S/T	1.00	0.78	0.65	0.51	1.00	0.79	0.65	0.51	1.00	0.81	0.68	0.54	1.00	1.00	0.70	0.56	1.00	1.00	0.72	0.58	1.00	1.00	0.77	0.63
		ΔT	26.69	24.93	21.64	18.23	26.64	24.88	21.59	18.18	26.89	25.13	21.84	18.43	26.62	24.86	21.57	18.16	26.39	24.62	21.34	17.93	27.49	25.73	22.44	19.03
		KW	2.32	2.31	2.31	2.33	2.61	2.60	2.60	2.62	2.93	2.93	2.92	2.94	3.28	3.28	3.27	3.29	3.67	3.67	3.66	3.68	4.13	4.12	4.12	4.14
		Amps	8.38	8.37	8.35	8.44	9.64	9.63	9.61	9.70	11.04	11.03	11.01	11.11	12.56	12.55	12.53	12.62	14.26	14.25	14.23	14.32	16.25	16.24	16.22	16.31
		Hi PR	258	259	261	265	299	300	302	306	341	342	344	349	387	388	390	394	436	437	439	444	489	490	492	496
		Lo PR	128	129	133	138	135	137	140	146	142	144	147	152	148	150	153	158	154	155	158	164	161	162	165	171
	1260	MBh	43.2	43.8	45.1	47.0	42.8	43.4	44.7	46.7	41.7	42.3	43.6	45.5	39.8	40.4	**41.7**	43.6	37.5	38.1	39.4	41.3	35.4	36.0	37.2	39.2
		S/T	1.00	0.83	0.70	0.56	1.00	0.84	0.71	0.56	1.00	1.00	0.73	0.59	1.00	1.00	**0.75**	0.61	1.00	1.00	0.77	0.63	1.00	1.00	1.00	0.68
		ΔT	25.75	23.99	20.70	17.30	25.70	23.94	20.65	17.25	25.95	24.19	20.90	17.50	25.69	23.93	**20.64**	17.23	25.45	23.69	20.40	16.99	26.55	24.79	21.50	18.10
		KW	2.33	2.33	2.32	2.34	2.62	2.62	2.61	2.63	2.94	2.94	2.93	2.96	3.29	3.29	**3.28**	3.31	3.68	3.68	3.67	3.70	4.14	4.14	4.13	4.15
		Amps	8.44	8.43	8.41	8.50	9.69	9.68	9.66	9.76	11.10	11.09	11.07	11.16	12.62	12.61	**12.59**	12.68	14.31	14.30	14.28	14.38	16.30	16.29	16.27	16.37
		Hi PR	260	261	263	267	301	302	303	308	343	344	346	350	389	390	**392**	396	438	439	441	446	491	492	494	498
		Lo PR	129	131	134	140	137	139	142	147	144	145	149	154	150	151	**154**	160	155	157	160	165	162	164	167	172
	1400	MBh	43.8	44.4	45.7	47.6	43.4	44.0	45.3	47.2	42.3	42.9	44.2	46.1	40.4	41.0	42.3	44.2	38.1	38.7	40.0	41.9	36.0	36.6	37.8	39.8
		S/T	1.00	0.86	0.73	0.59	1.00	0.87	0.74	0.60	1.00	1.00	0.76	0.62	1.00	1.00	0.78	0.64	1.00	1.00	0.80	0.66	1.00	1.00	1.00	0.71
		ΔT	24.95	23.19	19.90	16.49	24.90	23.14	19.85	16.45	25.15	23.39	20.10	16.69	24.88	23.12	19.83	16.43	24.65	22.89	19.60	16.19	25.75	23.99	20.70	17.29
		KW	2.34	2.34	2.33	2.36	2.63	2.63	2.62	2.64	2.95	2.95	2.95	2.97	3.30	3.30	3.29	3.32	3.69	3.69	3.68	3.71	4.15	4.15	4.14	4.17
		Amps	8.49	8.48	8.46	8.55	9.74	9.73	9.71	9.81	11.15	11.14	11.12	11.21	12.67	12.66	12.63	12.73	14.36	14.35	14.33	14.43	16.35	16.34	16.32	16.42
		Hi PR	262	263	265	269	302	304	305	310	345	346	348	352	391	392	394	398	440	441	443	447	493	494	496	500
		Lo PR	131	133	136	141	139	141	144	149	146	147	151	156	151	153	156	162	157	159	162	167	164	166	169	174
85	1120	MBh	43.4	44.0	45.3	47.2	43.1	43.7	44.9	46.9	42.0	42.6	43.8	45.8	40.0	40.6	41.9	43.9	37.7	38.3	39.6	41.5	35.6	36.2	37.5	39.4
		S/T	1.00	0.88	0.75	0.61	1.00	1.00	0.75	0.61	1.00	1.00	0.78	0.64	1.00	1.00	0.80	0.66	1.00	1.00	1.00	0.68	1.00	1.00	1.00	0.73
		ΔT	30.15	28.38	25.10	21.69	30.10	28.34	25.05	21.64	30.34	28.58	25.29	21.89	30.08	28.32	25.03	21.62	29.84	28.08	24.79	21.39	30.95	29.19	25.90	22.49
		KW	2.32	2.32	2.31	2.34	2.61	2.61	2.60	2.63	2.93	2.93	2.93	2.95	3.28	3.28	3.28	3.30	3.67	3.67	3.67	3.69	4.13	4.13	4.12	4.15
		Amps	8.40	8.39	8.37	8.47	9.66	9.65	9.63	9.73	11.06	11.06	11.03	11.13	12.58	12.57	12.55	12.65	14.28	14.27	14.25	14.35	16.27	16.26	16.24	16.34
		Hi PR	259	260	262	267	300	301	303	307	342	343	345	350	388	389	391	395	437	439	440	445	490	491	493	498
		Lo PR	130	131	134	140	137	139	142	148	144	146	149	154	150	151	155	160	155	157	160	166	163	164	167	173
	1260	MBh	43.9	44.5	45.8	47.7	43.6	44.2	45.4	47.4	42.5	43.1	44.3	46.3	40.5	41.1	42.4	44.4	38.2	38.8	40.1	42.0	36.1	36.7	38.0	39.9
		S/T	1.00	0.93	0.80	0.66	1.00	1.00	0.81	0.66	1.00	1.00	0.83	0.69	1.00	1.00	0.85	0.71	1.00	1.00	1.00	0.73	1.00	1.00	1.00	0.78
		ΔT	29.21	27.45	24.16	20.75	29.16	27.40	24.11	20.71	29.41	27.65	24.36	20.95	29.14	27.38	24.09	20.69	28.91	27.15	23.86	20.45	30.01	28.25	24.96	21.55
		KW	2.33	2.33	2.33	2.35	2.62	2.62	2.62	2.64	2.95	2.94	2.94	2.96	3.30	3.29	3.29	3.31	3.69	3.68	3.68	3.70	4.14	4.14	4.14	4.16
		Amps	8.46	8.45	8.43	8.53	9.72	9.71	9.69	9.78	11.12	11.11	11.09	11.19	12.64	12.63	12.61	12.71	14.34	14.33	14.31	14.40	16.33	16.32	16.30	16.39
		Hi PR	261	262	264	269	302	303	305	309	344	345	347	352	390	391	393	397	439	440	442	447	492	493	495	499
		Lo PR	131	133	136	142	139	141	144	149	146	147	151	156	152	153	156	162	157	159	162	167	164	166	169	174
	1400	MBh	44.5	45.1	46.4	48.3	44.2	44.8	46.0	48.0	43.0	43.6	44.9	46.8	41.1	41.7	43.0	44.9	38.8	39.4	40.7	42.6	36.7	37.3	38.5	40.5
		S/T	1.00	0.96	0.83	0.69	1.00	1.00	0.84	0.70	1.00	1.00	0.86	0.72	1.00	1.00	0.88	0.74	1.00	1.00	1.00	0.76	1.00	1.00	1.00	0.81
		ΔT	28.41	26.65	23.36	19.95	28.36	26.60	23.31	19.90	28.61	26.85	23.56	20.15	28.34	26.58	23.29	19.89	28.11	26.35	23.06	19.65	29.21	27.45	24.16	20.75
		KW	2.35	2.34	2.34	2.36	2.64	2.63	2.63	2.65	2.96	2.96	2.95	2.97	3.31	3.31	3.30	3.32	3.70	3.70	3.69	3.71	4.16	4.15	4.15	4.17
		Amps	8.51	8.50	8.48	8.58	9.77	9.76	9.74	9.83	11.17	11.16	11.14	11.24	12.69	12.68	12.66	12.75	14.39	14.38	14.36	14.45	16.38	16.37	16.35	16.44
		Hi PR	263	264	266	270	304	305	307	311	346	347	349	354	392	393	395	399	441	442	444	449	494	495	497	501
		Lo PR	133	135	138	143	141	142	146	151	148	149	152	158	153	155	158	164	159	161	164	169	166	168	171	176

IDB: Entering Indoor Dry Bulb Temperature

Shaded area reflects AHRI (TVA) conditions

kW = Total system power

High and low pressures are measured at the liquid and suction service valves.

Amps = outdoor unit amps (comp.+fan)

Expanded Cooling Data — GPGM560***41 Stage 2

			Outdoor Ambient Temperature																							
			65ºF				75ºF				85ºF				95ºF				105ºF				115ºF			
			Entering Indoor Wet Bulb Temperature																							
IDB	Airflow		59	63	67	71	59	63	67	71	59	63	67	71	59	63	67	71	59	63	67	71	59	63	67	71
70	1600	MBh	59.1	59.9	61.7	-	58.6	59.4	61.2	-	57.0	57.9	59.6	-	54.4	55.2	57.0	-	51.1	52.0	53.7	-	48.2	49.0	50.8	-
		S/T	0.59	0.52	0.39	-	0.60	0.52	0.39	-	0.62	0.55	0.42	-	1.00	0.57	0.44	-	1.00	0.59	0.46	-	1.00	0.64	0.51	-
		ΔT	19.60	17.78	14.37	-	19.55	17.73	14.32	-	19.81	17.98	14.58	-	19.53	17.71	14.30	-	19.29	17.46	14.06	-	20.43	18.61	15.20	-
		KW	3.68	3.68	3.67	-	4.14	4.14	4.13	-	4.66	4.65	4.64	-	5.21	5.21	5.20	-	5.83	5.83	5.82	-	6.56	6.56	6.55	-
		Amps	13.33	13.31	13.28	-	15.32	15.31	15.27	-	17.56	17.54	17.51	-	19.97	19.95	19.92	-	22.67	22.65	22.62	-	25.83	25.82	25.78	-
		Hi PR	269	270	272	-	312	313	315	-	356	357	359	-	404	405	407	-	456	457	459	-	511	512	514	-
		Lo PR	124	125	128	-	131	133	136	-	138	139	142	-	143	145	148	-	149	150	153	-	156	157	160	-
	1800	MBh	59.8	60.6	62.4	-	59.3	60.1	61.9	-	57.7	58.5	60.3	-	55.1	55.9	57.7	-	51.8	52.7	54.4	-	48.9	49.7	51.5	-
		S/T	0.64	0.57	0.44	-	0.65	0.57	0.44	-	0.67	0.60	0.47	-	1.00	0.62	0.49	-	1.00	0.64	0.51	-	1.00	0.69	0.56	-
		ΔT	18.63	16.81	13.40	-	18.58	16.76	13.35	-	18.84	17.01	13.61	-	18.56	16.74	13.33	-	18.32	16.50	13.09	-	19.46	17.64	14.23	-
		KW	3.70	3.70	3.69	-	4.16	4.16	4.15	-	4.68	4.67	4.67	-	5.23	5.23	5.22	-	5.85	5.85	5.84	-	6.58	6.58	6.57	-
		Amps	13.42	13.40	13.37	-	15.42	15.40	15.37	-	17.65	17.63	17.60	-	20.06	20.05	20.01	-	22.76	22.74	22.71	-	25.92	25.91	25.87	-
		Hi PR	271	272	274	-	314	315	317	-	358	359	361	-	406	407	409	-	458	459	461	-	513	514	516	-
		Lo PR	125	127	130	-	133	134	138	-	139	141	144	-	145	147	150	-	150	152	155	-	157	159	162	-
	2000	MBh	60.6	61.4	63.2	-	60.1	60.9	62.7	-	58.5	59.4	61.1	-	55.9	56.7	58.5	-	52.6	53.5	55.2	-	49.7	50.5	52.3	-
		S/T	0.67	0.60	0.47	-	0.68	0.60	0.47	-	0.70	0.63	0.50	-	1.00	0.65	0.52	-	1.00	0.67	0.54	-	1.00	0.72	0.59	-
		ΔT	17.80	15.98	12.57	-	17.75	15.93	12.52	-	18.01	16.18	12.78	-	17.73	15.91	12.50	-	17.49	15.66	12.26	-	18.63	16.81	13.40	-
		KW	3.72	3.72	3.71	-	4.18	4.18	4.17	-	4.69	4.69	4.68	-	5.25	5.25	5.24	-	5.87	5.87	5.86	-	6.60	6.59	6.59	-
		Amps	13.49	13.48	13.44	-	15.49	15.48	15.44	-	17.72	17.71	17.67	-	20.14	20.12	20.09	-	22.84	22.82	22.79	-	26.00	25.99	25.95	-
		Hi PR	273	274	276	-	316	317	319	-	360	361	363	-	408	409	411	-	460	461	463	-	515	516	518	-
		Lo PR	127	129	132	-	135	136	139	-	141	143	146	-	147	148	151	-	152	154	157	-	159	161	164	-
75	1600	MBh	59.1	60.0	61.7	64.4	58.6	59.4	61.2	63.9	57.1	57.9	59.6	62.3	54.4	55.2	57.0	59.7	51.2	52.0	53.8	56.5	48.2	49.0	50.8	53.5
		S/T	0.71	0.64	0.51	0.37	0.72	0.65	0.52	0.38	1.00	0.67	0.54	0.40	1.00	0.69	0.56	0.42	1.00	0.71	0.58	0.44	1.00	1.00	0.63	0.49
		ΔT	23.62	21.79	18.38	14.85	23.57	21.74	18.33	14.80	23.82	22.00	18.59	15.06	23.55	21.72	18.31	14.78	23.30	21.48	18.07	14.54	24.45	22.62	19.21	15.68
		KW	3.68	3.68	3.67	3.70	4.14	4.14	4.13	4.16	4.65	4.65	4.64	4.68	5.21	5.20	5.20	5.23	5.83	5.83	5.82	5.85	6.56	6.55	6.55	6.58
		Amps	13.31	13.30	13.26	13.42	15.31	15.30	15.26	15.41	17.54	17.53	17.49	17.65	19.96	19.94	19.91	20.06	22.66	22.64	22.61	22.76	25.82	25.80	25.77	25.92
		Hi PR	269	271	272	277	312	313	315	320	356	357	359	364	404	405	407	412	456	457	459	464	511	512	514	519
		Lo PR	124	125	128	134	131	133	136	141	138	139	142	148	143	145	148	153	149	150	154	159	156	157	160	166
	1800	MBh	59.8	60.7	62.4	65.1	59.3	60.1	61.9	64.6	57.7	58.6	60.3	63.0	55.1	**55.9**	57.7	60.4	51.9	52.7	54.5	57.1	48.9	49.7	51.5	54.2
		S/T	0.76	0.69	0.56	0.42	0.77	0.70	0.57	0.43	1.00	0.72	0.59	0.45	1.00	**0.74**	0.61	0.47	1.00	0.76	0.63	0.49	1.00	1.00	0.68	0.54
		ΔT	22.65	20.82	17.41	13.88	22.60	20.77	17.36	13.83	22.85	21.03	17.62	14.09	22.58	**20.75**	17.34	13.81	22.33	20.51	17.10	13.57	23.48	21.65	18.24	14.71
		KW	3.70	3.70	3.69	3.72	4.16	4.16	4.15	4.18	4.67	4.67	4.66	4.70	5.23	**5.23**	5.22	5.25	5.85	5.85	5.84	5.87	6.58	6.57	6.57	6.60
		Amps	13.40	13.39	13.35	13.51	15.40	15.39	15.35	15.51	17.63	17.62	17.58	17.74	20.05	**20.03**	20.00	20.15	22.75	22.73	22.70	22.85	25.91	25.90	25.86	26.01
		Hi PR	271	273	275	279	314	315	317	322	358	360	361	366	406	**407**	409	414	458	459	461	466	513	514	516	521
		Lo PR	125	127	130	135	133	134	138	143	139	141	144	149	145	**147**	150	155	150	152	155	160	157	159	162	167
	2000	MBh	60.6	61.5	63.2	65.9	60.1	60.9	62.7	65.4	58.6	59.4	61.2	63.9	55.9	56.8	58.5	61.2	52.7	53.5	55.3	58.0	49.7	50.6	52.3	55.0
		S/T	0.79	0.72	0.59	0.45	1.00	0.73	0.60	0.46	1.00	0.75	0.62	0.48	1.00	0.77	0.64	0.50	1.00	0.79	0.66	0.52	1.00	1.00	0.71	0.57
		ΔT	21.82	19.99	16.58	13.05	21.77	19.94	16.53	13.00	22.02	20.20	16.79	13.26	21.75	19.92	16.51	12.98	21.50	19.68	16.27	12.74	22.65	20.82	17.41	13.88
		KW	3.72	3.72	3.71	3.74	4.18	4.17	4.17	4.20	4.69	4.69	4.68	4.72	5.25	5.24	5.24	5.27	5.87	5.86	5.86	5.89	6.60	6.59	6.58	6.62
		Amps	13.48	13.47	13.43	13.58	15.48	15.46	15.43	15.58	17.71	17.70	17.66	17.81	20.13	20.11	20.08	20.23	22.82	22.81	22.77	22.93	25.99	25.97	25.94	26.09
		Hi PR	273	275	276	281	316	317	319	324	360	361	363	368	408	409	411	416	460	461	463	468	515	516	518	523
		Lo PR	127	129	132	137	135	136	139	145	141	143	146	151	147	148	151	157	152	154	157	162	159	161	164	169

IDB: Entering Indoor Dry Bulb Temperature

Shaded area reflects ACCA (TVA) conditions

kW = Total system power

High and low pressures are measured at the liquid and suction service valves.

Amps = outdoor unit amps (comp.+fan)

Expanded Cooling Data — GPGM560***41 Stage 2 (cont.)

			Outdoor Ambient Temperature																							
			65ºF				75ºF				85ºF				95ºF				105ºF				115ºF			
			Entering Indoor Wet Bulb Temperature																							
IDB	Airflow		59	63	67	71	59	63	67	71	59	63	67	71	59	63	67	71	59	63	67	71	59	63	67	71
80	1600	MBh	59.4	60.3	62.0	64.7	58.9	59.7	61.5	64.2	57.4	58.2	60.0	62.6	54.7	55.5	57.3	60.0	51.5	52.3	54.1	56.8	48.5	49.3	51.1	53.8
		S/T	1.00	0.76	0.63	0.49	1.00	0.77	0.64	0.50	1.00	0.79	0.66	0.52	1.00	1.00	0.68	0.54	1.00	1.00	0.70	0.56	1.00	1.00	0.75	0.61
		ΔT	27.66	25.83	22.42	18.89	27.61	25.78	22.37	18.84	27.86	26.04	22.63	19.10	27.59	25.76	22.35	18.82	27.34	25.52	22.11	18.58	28.49	26.66	23.25	19.72
		KW	3.68	3.68	3.67	3.71	4.14	4.14	4.13	4.17	4.66	4.65	4.64	4.68	5.21	5.21	5.20	5.23	5.83	5.83	5.82	5.85	6.56	6.56	6.55	6.58
		Amps	13.32	13.31	13.27	13.43	15.32	15.31	15.27	15.42	17.55	17.54	17.50	17.66	19.97	19.95	19.92	20.07	22.67	22.65	22.62	22.77	25.83	25.82	25.78	25.93
		Hi PR	270	271	273	278	312	314	315	320	357	358	360	365	405	406	408	412	456	457	459	464	511	513	514	519
		Lo PR	124	126	129	134	132	133	136	142	138	140	143	148	144	145	149	154	149	151	154	159	156	158	161	166
	1800	MBh	60.1	61.0	62.7	65.4	59.6	60.4	62.2	64.9	58.1	58.9	60.7	63.3	55.4	56.2	**58.0**	60.7	52.2	53.0	54.8	57.5	49.2	50.0	51.8	54.5
		S/T	1.00	0.81	0.68	0.54	1.00	0.82	0.69	0.55	1.00	0.84	0.71	0.57	1.00	1.00	**0.73**	0.59	1.00	1.00	0.75	0.61	1.00	1.00	0.80	0.66
		ΔT	26.69	24.86	21.45	17.92	26.64	24.81	21.40	17.87	26.89	25.07	21.66	18.13	26.62	24.79	**21.39**	17.85	26.37	24.55	21.14	17.61	27.52	25.69	22.28	18.75
		KW	3.70	3.70	3.69	3.73	4.16	4.16	4.15	4.19	4.68	4.67	4.66	4.70	5.23	5.23	**5.22**	5.26	5.85	5.85	5.84	5.88	6.58	6.58	6.57	6.60
		Amps	13.41	13.40	13.36	13.52	15.41	15.40	15.36	15.52	17.64	17.63	17.59	17.75	20.06	20.04	**20.01**	20.16	22.76	22.74	22.71	22.86	25.92	25.91	25.87	26.02
		Hi PR	272	273	275	280	314	316	317	322	359	360	362	367	407	408	**410**	414	458	459	461	466	513	515	516	521
		Lo PR	126	127	131	136	133	135	138	143	140	142	145	150	146	147	**150**	155	151	153	156	161	158	159	163	168
	2000	MBh	60.9	61.8	63.5	66.2	60.4	61.2	63.0	65.7	58.9	59.7	61.5	64.2	56.2	57.1	58.8	61.5	53.0	53.8	55.6	58.3	50.0	50.9	52.6	55.3
		S/T	1.00	0.84	0.71	0.57	1.00	0.85	0.72	0.58	1.00	0.87	0.74	0.60	1.00	1.00	0.76	0.62	1.00	1.00	0.78	0.64	1.00	1.00	0.83	0.69
		ΔT	25.86	24.03	20.62	17.09	25.81	23.98	20.57	17.04	26.06	24.24	20.83	17.30	25.79	23.96	20.55	17.02	25.54	23.72	20.31	16.78	26.69	24.86	21.45	17.92
		KW	3.72	3.72	3.71	3.74	4.18	4.18	4.17	4.20	4.69	4.69	4.68	4.72	5.25	5.25	5.24	5.27	5.87	5.87	5.86	5.89	6.60	6.59	6.59	6.62
		Amps	13.49	13.48	13.44	13.59	15.49	15.48	15.44	15.59	17.72	17.71	17.67	17.83	20.14	20.12	20.09	20.24	22.83	22.82	22.78	22.94	26.00	25.98	25.95	26.10
		Hi PR	274	275	277	282	316	318	319	324	361	362	364	369	409	410	412	416	460	461	463	468	515	517	518	523
		Lo PR	128	129	132	138	135	137	140	145	142	143	146	152	147	149	152	157	153	154	157	163	160	161	164	170
85	1600	MBh	60.4	61.3	63.0	65.7	59.9	60.7	62.5	65.2	58.4	59.2	60.9	63.6	55.7	56.5	58.3	61.0	52.5	53.3	55.1	57.8	49.5	50.3	52.1	54.8
		S/T	1.00	0.86	0.73	0.59	1.00	0.87	0.73	0.60	1.00	1.00	0.76	0.62	1.00	1.00	0.78	0.64	1.00	1.00	0.80	0.66	1.00	1.00	1.00	0.71
		ΔT	31.24	29.41	26.01	22.48	31.19	29.36	25.96	22.43	31.45	29.62	26.21	22.68	31.17	29.35	25.94	22.41	30.93	29.10	25.69	22.16	32.07	30.24	26.84	23.31
		KW	3.69	3.69	3.68	3.71	4.15	4.15	4.14	4.17	4.66	4.66	4.65	4.69	5.22	5.22	5.21	5.24	5.84	5.84	5.83	5.86	6.57	6.56	6.56	6.59
		Amps	13.36	13.35	13.31	13.46	15.36	15.34	15.31	15.46	17.59	17.58	17.54	17.69	20.01	19.99	19.96	20.11	22.70	22.69	22.65	22.81	25.87	25.85	25.82	25.97
		Hi PR	271	272	274	279	314	315	317	321	358	359	361	366	406	407	409	414	458	459	461	465	513	514	516	520
		Lo PR	126	128	131	136	134	135	138	144	140	142	145	150	146	147	150	156	151	153	156	161	158	160	163	168
	1800	MBh	61.1	62.0	63.7	66.4	60.6	61.4	63.2	65.9	59.0	59.9	61.6	64.3	56.4	57.2	59.0	61.7	53.2	54.0	55.8	58.4	50.2	51.0	52.8	55.5
		S/T	1.00	0.91	0.78	0.64	1.00	1.00	0.78	0.65	1.00	1.00	0.81	0.67	1.00	1.00	0.83	0.69	1.00	1.00	0.85	0.71	1.00	1.00	1.00	0.76
		ΔT	30.27	28.45	25.04	21.51	30.22	28.40	24.99	21.46	30.48	28.65	25.24	21.71	30.20	28.38	24.97	21.44	29.96	28.13	24.72	21.19	31.10	29.28	25.87	22.34
		KW	3.71	3.71	3.70	3.74	4.17	4.17	4.16	4.20	4.68	4.68	4.67	4.71	5.24	5.24	5.23	5.26	5.86	5.86	5.85	5.88	6.59	6.59	6.58	6.61
		Amps	13.45	13.44	13.40	13.56	15.45	15.44	15.40	15.55	17.68	17.67	17.63	17.79	20.10	20.08	20.05	20.20	22.79	22.78	22.75	22.90	25.96	25.94	25.91	26.06
		Hi PR	273	274	276	281	316	317	319	323	360	361	363	368	408	409	411	416	460	461	463	467	515	516	518	522
		Lo PR	128	129	132	138	135	137	140	145	142	143	147	152	147	149	152	157	153	154	158	163	160	161	164	170
	2000	MBh	61.9	62.8	64.5	67.2	61.4	62.2	64.0	66.7	59.9	60.7	62.5	65.2	57.2	58.1	59.8	62.5	54.0	54.8	56.6	59.3	51.0	51.9	53.6	56.3
		S/T	1.00	0.94	0.81	0.67	1.00	1.00	0.81	0.68	1.00	1.00	0.84	0.70	1.00	1.00	0.86	0.72	1.00	1.00	1.00	0.74	1.00	1.00	1.00	0.79
		ΔT	29.44	27.61	24.21	20.68	29.39	27.56	24.16	20.63	29.65	27.82	24.41	20.88	29.37	27.55	24.14	20.61	29.13	27.30	23.89	20.36	30.27	28.44	25.04	21.51
		KW	3.73	3.73	3.72	3.75	4.19	4.19	4.18	4.21	4.70	4.70	4.69	4.73	5.26	5.25	5.25	5.28	5.88	5.88	5.87	5.90	6.61	6.60	6.60	6.63
		Amps	13.53	13.51	13.48	13.63	15.53	15.51	15.48	15.63	17.76	17.74	17.71	17.86	20.17	20.16	20.13	20.28	22.87	22.86	22.82	22.98	26.04	26.02	25.99	26.14
		Hi PR	275	276	278	283	318	319	321	325	362	363	365	370	410	411	413	418	462	463	465	469	517	518	520	524
		Lo PR	130	131	134	139	137	139	142	147	144	145	148	154	149	151	154	159	155	156	159	165	161	163	166	171

IDB: Entering Indoor Dry Bulb Temperature

Shaded area reflects AHRI (TVA) conditions

kW = Total system power

High and low pressures are measured at the liquid and suction service valves.

Amps = outdoor unit amps (comp.+fan)

GPGM52406041 - Rise Range: 25° - 55°												
E.S.P.	T1 LOW STAGE HEATING SPEED			T2 HIGH STAGE HEATING SPEED			T3 LOW STAGE COOLING SPEED		T4 HIGH STAGE COOLING SPEED		T5 COOLING SPEED	
	CFM	WATTS	RISE	CFM	WATTS	RISE	CFM	WATTS	CFM	WATTS	CFM	WATTS
0.1	700	76	48	1080	197	42	744	72	1021	149	1090	197
0.2	665	84	51	1032	204	44	696	79	976	157	1055	201
0.3	614	91	55	988	212	46	646	86	932	164	1020	207
0.4	561	98	60	948	220	47	591	93	885	171	995	212
0.5	505	105	67	902	225	50	524	99	844	178	955	230
0.6	438	114	77	859	231	52	466	106	795	185	915	240
0.7	374	119	90	813	238	55	405	111	744	192	880	255
0.8	318	125	106	770	245	58	356	116	983	199	835	246

GPGM530080M41 - Rise Range: 35° - 65°												
E.S.P.	T1 LOW STAGE HEATING SPEED			T2 HIGH STAGE HEATING SPEED			T3 LOW STAGE COOLING SPEED		T4 HIGH STAGE COOLING SPEED		T5 COOLING SPEED	
	CFM	WATTS	RISE	CFM	WATTS	RISE	CFM	WATTS	CFM	WATTS	CFM	WATTS
0.1	1035	156	43	1300	287	46	848	89	1171	201	1295	289
0.2	990	165	45	1265	293	47	797	96	1127	208	1260	294
0.3	950	173	47	1220	310	49	740	104	1087	217	1220	304
0.4	910	184	49	1190	306	50	680	112	1043	224	1180	313
0.5	865	190	52	1145	319	52	615	120	990	231	1140	319
0.6	820	200	55	1105	320	54	551	126	941	239	1105	326
0.7	765	204	59	1070	330	56	462	132	885	245	1055	334
0.8	725	211	62	1015	338	59	384	138	826	251	1015	337

GPGM53608041 - Rise Range: 35° - 65°												
E.S.P.	T1 LOW STAGE HEATING SPEED			T2 HIGH STAGE HEATING SPEED			T3 LOW STAGE COOLING SPEED		T4 HIGH STAGE COOLING SPEED		T5 COOLING SPEED	
	CFM	WATTS	RISE	CFM	WATTS	RISE	CFM	WATTS	CFM	WATTS	CFM	WATTS
0.1	950	115	47	1245	230	48	960	134	1450	396	1440	354
0.2	895	124	50	1195	238	50	897	142	1400	405	1390	365
0.3	840	134	54	1150	247	52	828	148	1349	413	1355	369
0.4	775	146	58	1095	256	55	766	156	1302	420	1300	383
0.5	710	152	63	1045	263	57	695	163	1253	428	1260	396
0.6	650	160	X	990	277	61	634	168	1203	436	1210	402
0.7	590	163	X	935	285	64	571	173	1152	442	1160	397
0.8	540	171	X	870	288	X	509	178	1102	449	1110	415

GPGM54210041 - Rise Range: 35° - 65°												
E.S.P.	T1 LOW STAGE HEATING SPEED			T2 HIGH STAGE HEATING SPEED			T3 LOW STAGE COOLING SPEED		T4 HIGH STAGE COOLING SPEED		T5 COOLING SPEED	
	CFM	WATTS	RISE	CFM	WATTS	RISE	CFM	WATTS	CFM	WATTS	CFM	WATTS
0.1	1100	172	51	1420	325	53	1210	220	1571	430	1620	484
0.2	1040	181	54	1360	331	55	1140	226	1520	439	1575	489
0.3	985	185	57	1310	342	57	1085	235	1472	448	1530	497
0.4	920	193	61	1275	353	59	1023	243	1403	454	1490	500
0.5	875	203	64	1210	360	62	963	250	1356	463	1450	507
0.6	815	207	X	1165	368	64	901	259	1302	470	1405	518
0.7	765	215	X	1115	369	X	846	266	1247	476	1345	516
0.8	710	216	X	1075	385	X	786	271	1188	480	1300	528

GPGM54810041 - Rise Range: 35° - 65°												
E.S.P.	T1 LOW STAGE HEATING SPEED			T2 HIGH STAGE HEATING SPEED			T3 LOW STAGE COOLING SPEED		T4 HIGH STAGE COOLING SPEED		T5 COOLING SPEED	
	CFM	WATTS	RISE	CFM	WATTS	RISE	CFM	WATTS	CFM	WATTS	CFM	WATTS
0.1	1085	171	52	1410	326	53	1326	287	1601	733	1790	641
0.2	1035	178	54	1365	329	55	1273	294	1544	744	1745	650
0.3	985	184	57	1315	337	57	1222	303	1485	751	1710	659
0.4	925	193	61	1270	353	59	1172	311	1435	760	1670	663
0.5	870	198	65	1220	360	61	1123	319	1383	766	1625	674
0.6	815	208	X	1175	372	64	1073	328	1333	779	1585	672
0.7	760	213	X	1115	375	X	1027	337	1279	787	1540	675
0.8	710	219	X	1080	381	X	978	344	1219	792	1495	683

5 Ton Models: GPGM560*41A**

Down Flow						
Speed Tap	Torque %	Torque oz-ft	External Static Pressure (ESP), in w.c.	SCFM	RPM	BHP
T1	25	20	0.2	983	570	0.14
			0.4	833	659	0.16
			0.6	703	739	0.18
			0.8	574	808	0.19
T2	32	25.9	0.2	1175	640	0.20
			0.4	1057	714	0.22
			0.6	902	801	0.25
			0.8	790	874	0.27
T3	78	62.4	0.2	1963	883	0.66
			0.4	1858	939	0.70
			0.6	1760	990	0.74
			0.8	1668	1038	0.77
T4	78	62.4	0.2	1963	883	0.66
			0.4	1858	939	0.70
			0.6	1760	990	0.74
			0.8	1668	1038	0.77
T5	100	80	0.2	2369	2196	2.09
			0.4	2248	987	0.94
			0.6	2144	1024	0.97
			0.8	2054	1070	1.02

Horizontal Flow						
Speed Tap	Torque %	Torque oz-ft	External Static Pressure (ESP), in w.c.	SCFM	RPM	BHP
T1	25	20	0.2	1003	606	0.14
			0.4	850	701	0.17
			0.6	718	785	0.19
			0.8	586	858	0.20
T2	32	25.9	0.2	1229	617	0.19
			0.4	1105	699	0.22
			0.6	945	795	0.24
			0.8	844	861	0.27
T3	78	62.4	0.2	2032	853	0.63
			0.4	1941	908	0.67
			0.6	1850	966	0.72
			0.8	1757	1018	0.76
T4	78	62.4	0.2	2032	853	0.63
			0.4	1941	908	0.67
			0.6	1850	966	0.72
			0.8	1757	1018	0.76
T5	100	80	0.2	2323	929	0.88
			0.4	2245	978	0.93
			0.6	2161	1028	0.98
			0.8	2080	1079	1.03

*Shaded area indicats air flow below 1500 SCFM (300 SCFM/ton) that is not recommended for High Stage cooling or heating.

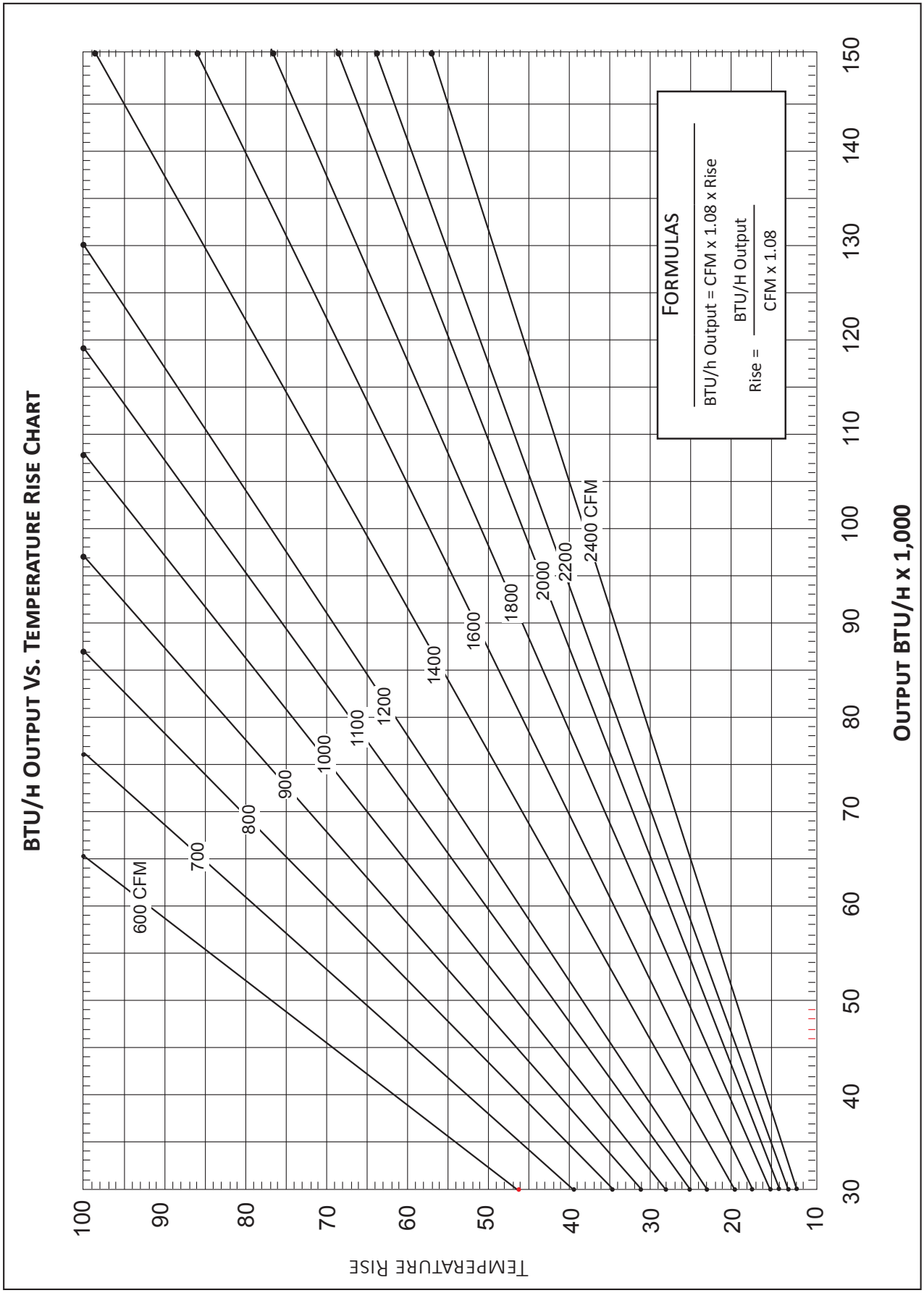
BTU/h Output Vs. Temperature Rise Chart
Temperature Rise
Output BTU/h x 1,000
600 CFM
700
800
900
1000
1100
1200
1400
1600
1800
2000
2200
2400 CFM
Formulas
BTU/h Output = CFM x 1.08 x Rise
Rise = BTU/H Output / CFM x 1.08
100
90
80
70
60
50
40
30
20
10
30
40
50
60
70
80
90
100
110
120
130
140
150

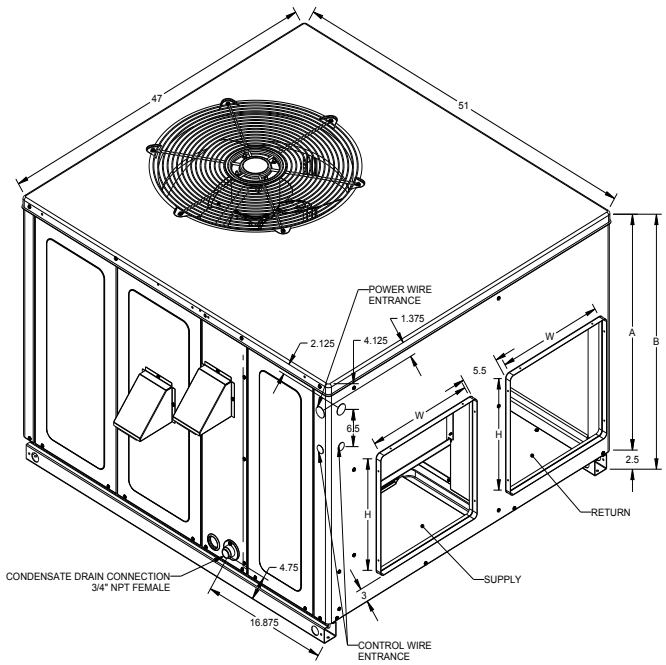

Model	Unit Dimensions (Inches)				Chassis Size
			Height		
	W	D	A	B	
GPGM524***41**	47	51	32	34 1/2	Medium
GPGM530***41**	47	51	32	34 1/2	Medium
GPGM536***41**	47	51	40	42 1/2	Large
GPGM542***41**	47	51	40	42 1/2	Large
GPGM548***41**	47	51	40	42 1/2	Large
GPGM560***41**	73 3/8	47 5/8	39	43 1/2	X-Large

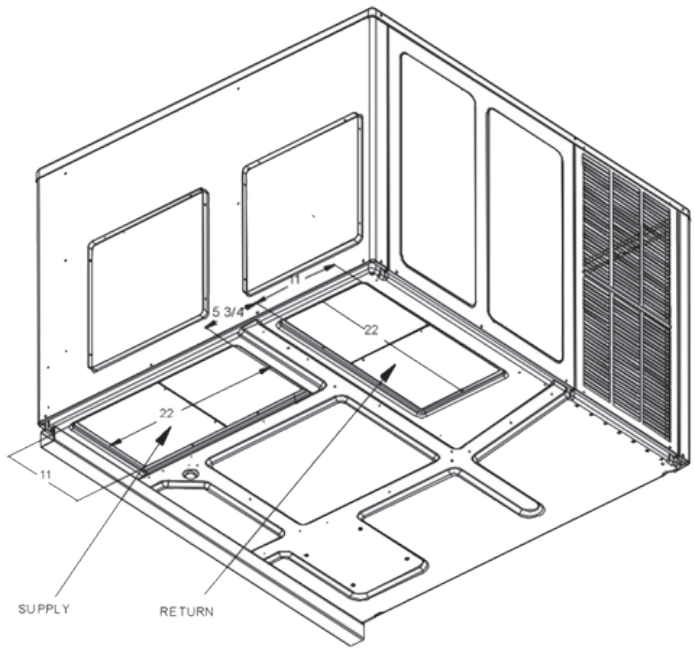

Model	Duct Openings			
	Supply		Return	
	W	H	W	H
GPGM524***41**	16	16	16	16
GPGM530***41**	16	16	16	16
GPGM536***41**	16	18	16	18
GPGM542***41**	16	18	16	18
GPGM548***41**	16	18	16	18
GPGM560***41**	17	12	11	25

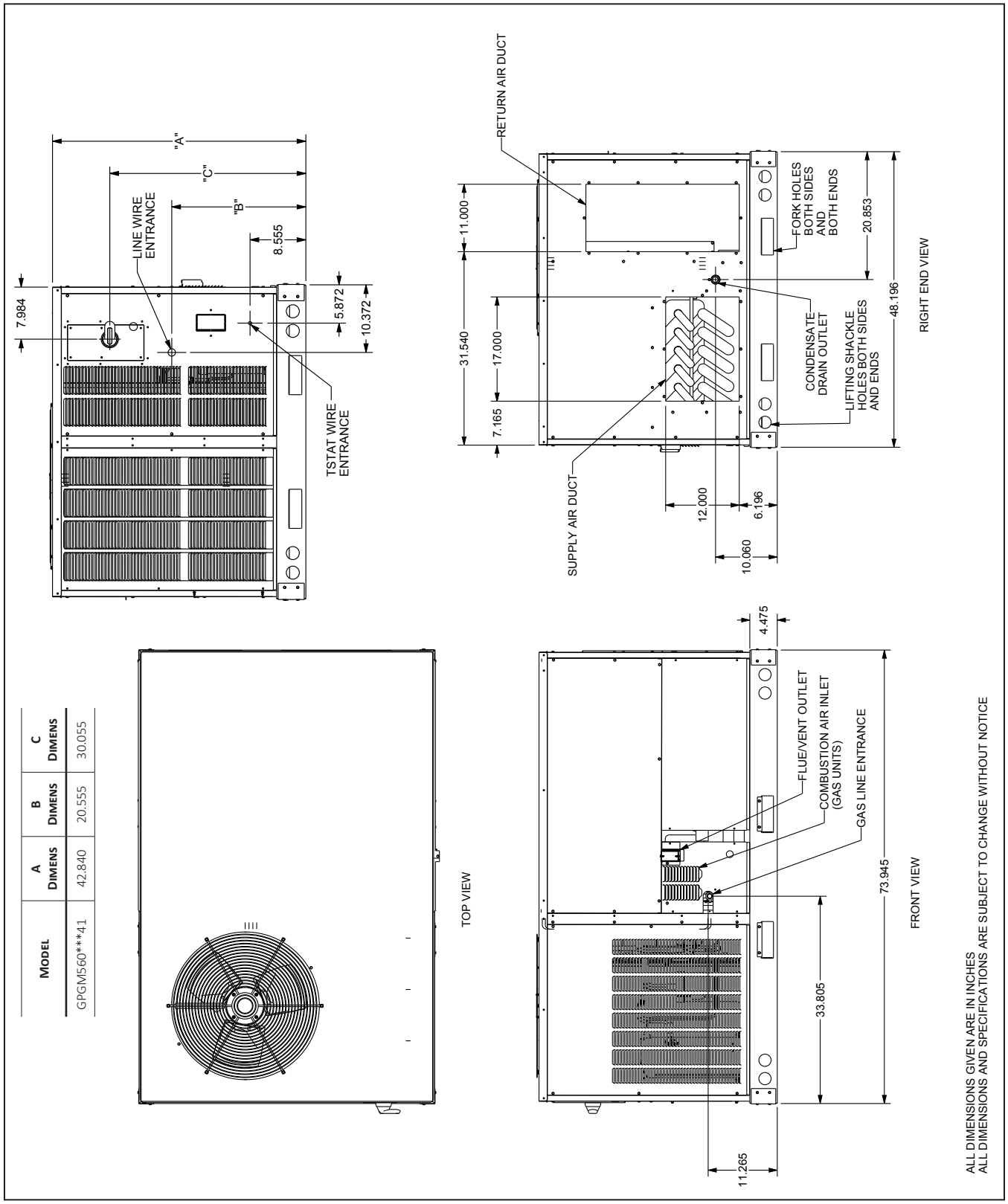

MODEL	A DIMENS	B DIMENS	C DIMENS
GPGM560***41	42.840	20.555	30.055

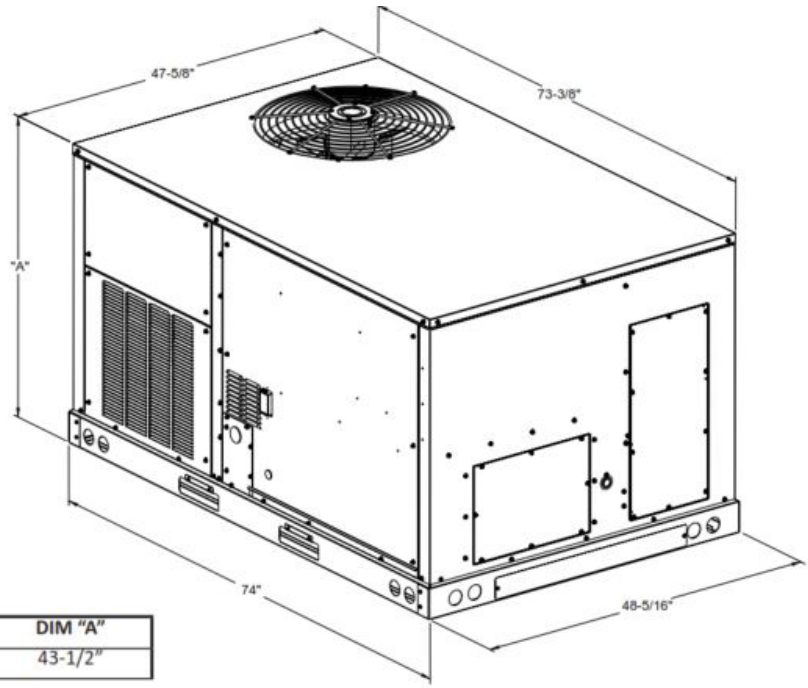

Model size	DIM "A"
5 ton	43-1/2"

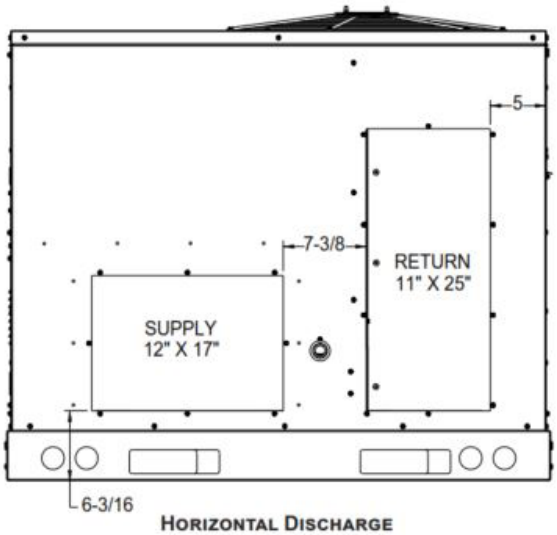

HORIZONTAL DISCHARGE

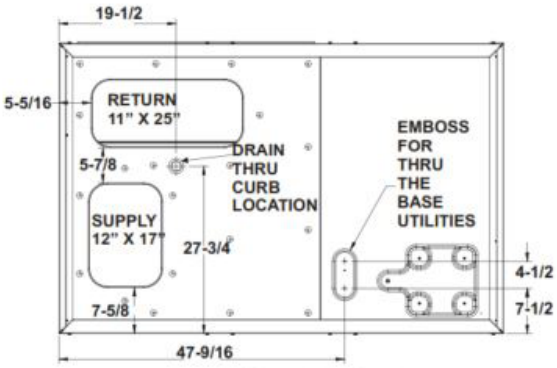

BOTTOM VIEW OF UNIT

VERTICAL DISCHARGE

NOTE: REFER TO IOD-7082 INCLUDED IN THE LITERATURE PACK FOR INSTALLING HORIZONTAL DUCT COVERS.

Provisions for forks have been included in the unit base frame. No other fork locations are approved.

- Unit must be lifted by the four lifting holes located at the base frame corners.
- Lifting cables should be attached to the unit with shackles.
- The distance between the crane hook and the top of the unit must not be less than 60”.
- Two spreader bars must span over the unit to prevent damage to the cabinet by the lift cables. Spreader bars must be of sufficient length so that cables do not come in contact with the unit during transport. Remove wood struts mounted beneath unit base frame before setting unit on roof curb. These struts are intended to protect unit base frame from fork lift damage. To remove the struts, extract the sheet metal retainers and pull the struts through the base of the unit. Refer to rigging label on the unit.

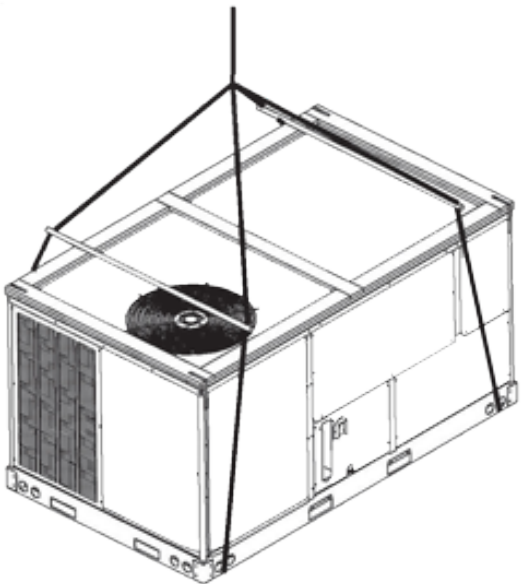

Important: If using bottom discharge with roof curb, duct-work should be attached to the curb prior to installing the unit. Duct-work dimensions are shown in Roof Curb Installation Instructions Manual.

Refer to the Roof Curb Installation Instructions for proper curb installation. Curbing must be installed in compliance with the National Roofing Contractors Association Manual.

Lower unit carefully onto roof mounting curb. While rigging the unit, the center of gravity will cause the condenser end to be lower than the supply air end.

Bring condenser end of unit into alignment with the curb. With condenser end of the unit resting on curb member and using curb as a fulcrum, lower opposite end of the unit until entire unit is seated on the curb. When a rectangular cantilever curb is used, take care to center the unit. Check for proper alignment and orientation of supply and return openings with duct.

To assist in determining rigging requirements, unit weights are shown on the following page.

Curb installations must comply with local codes and should follow the established guidelines of the National Roofing Contractors Association.

Proper unit installation requires that the roof curb be firmly and permanently attached to the roof structure. Check for adequate fastening method prior to setting the unit on the curb.

Full perimeter roof curbs are available from the factory and are shipped unassembled. The installing contractor is responsible for field assembly, squaring, leveling, and mounting on the roof structure. All required hardware necessary for the assembly of the sheet metal curb is included in the curb accessory package.

- Determine sufficient structural support before locating and mounting the curb and package unit.
- Duct-work must be constructed using industry guidelines. The duct-work must be placed into the roof curb before mounting the package unit. Our full perimeter curbs include duct connection frames to be assembled with the curb. Cantilevered-type curbs are not available from the factory.
- Contractor furnishes curb insulation, cant strips, flashing, and general roofing material.
- Support curbs on parallel sides with roof members. To prevent damage to the unit, the roof members cannot penetrate supply and return duct openings.

Note: The unit and curb accessories are designed to allow vertical duct installation before unit placement. Duct installation after unit placement is not recommended.

See the manual shipped with the roof curb for assembly and installation instructions.

3-D View

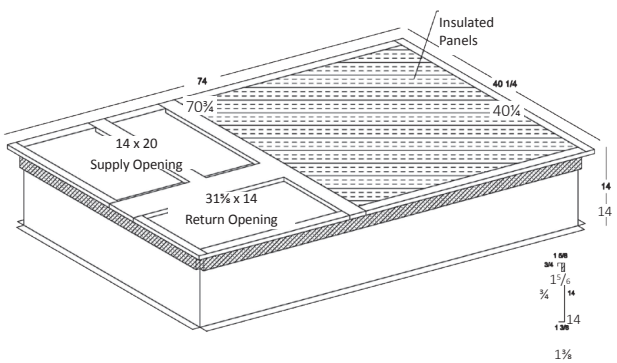

Top View

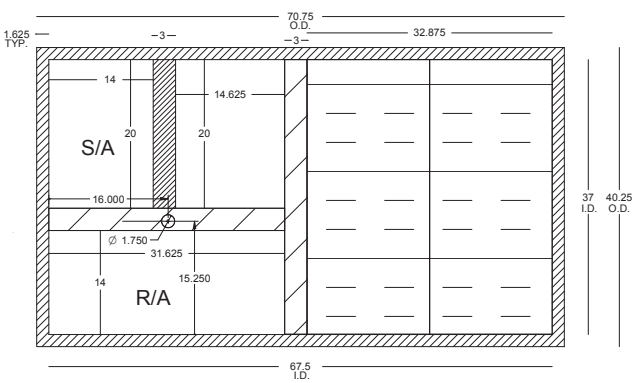

Corner & Center-of-Gravity Locations

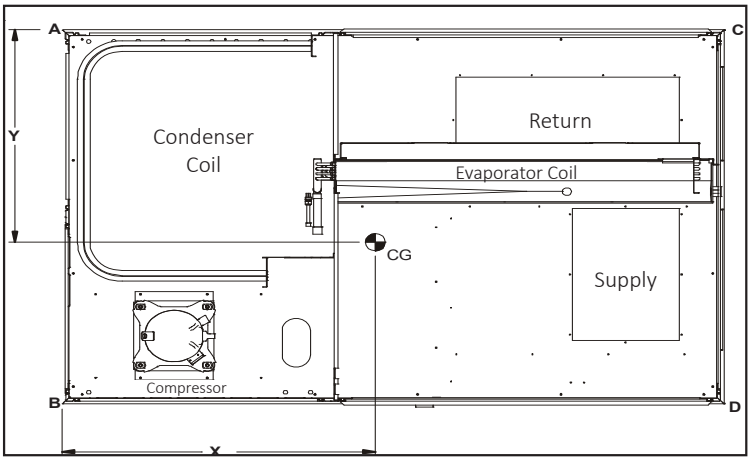

Model	X (In)	Y (In)	Shipping Weight (Lbs)	Operating Weight (Lbs)	Corner Weights (Lbs.)			
					A	B	C	D
GPGM560***41**	46.4	28.1	655	629	186	204	65	174

Unit Clearances

Maintain an adequate clearance around the unit for safety, service, maintenance, and proper unit operation. Leave a total clearance of 75” on the main control panel side of the unit for possible removal of fan shaft, coil, electric heat, and gas furnace. Leave a clearance of 48” on all other sides of the unit for possible compressor removal or service access, and to ensure proper ventilation and condenser airflow. Do not install the unit beneath any obstruction. Install the unit away from all building exhausts to inhibit ingestion of exhaust air into the unit’s fresh-air intake.

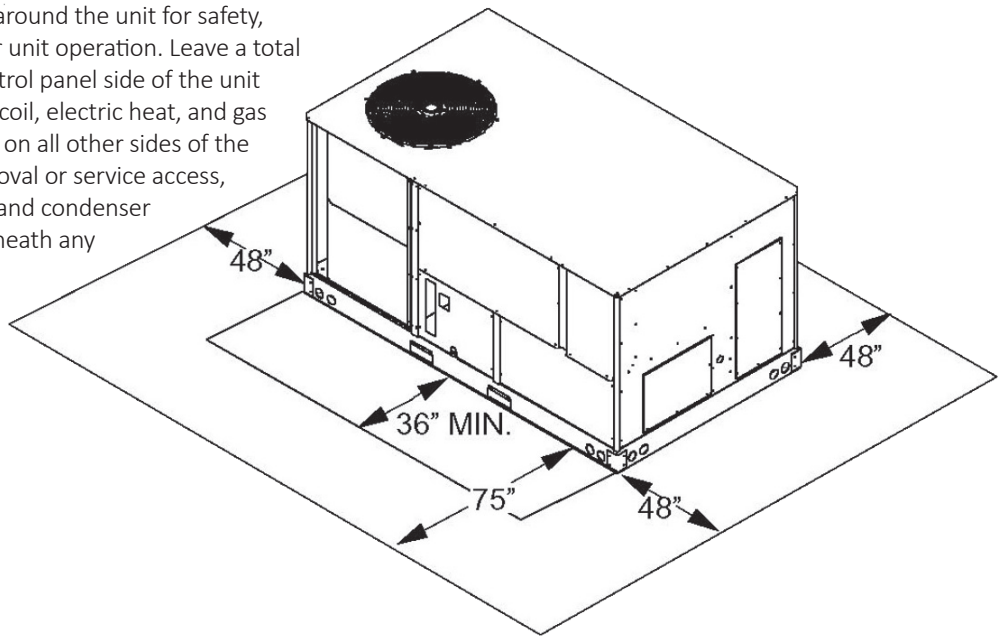

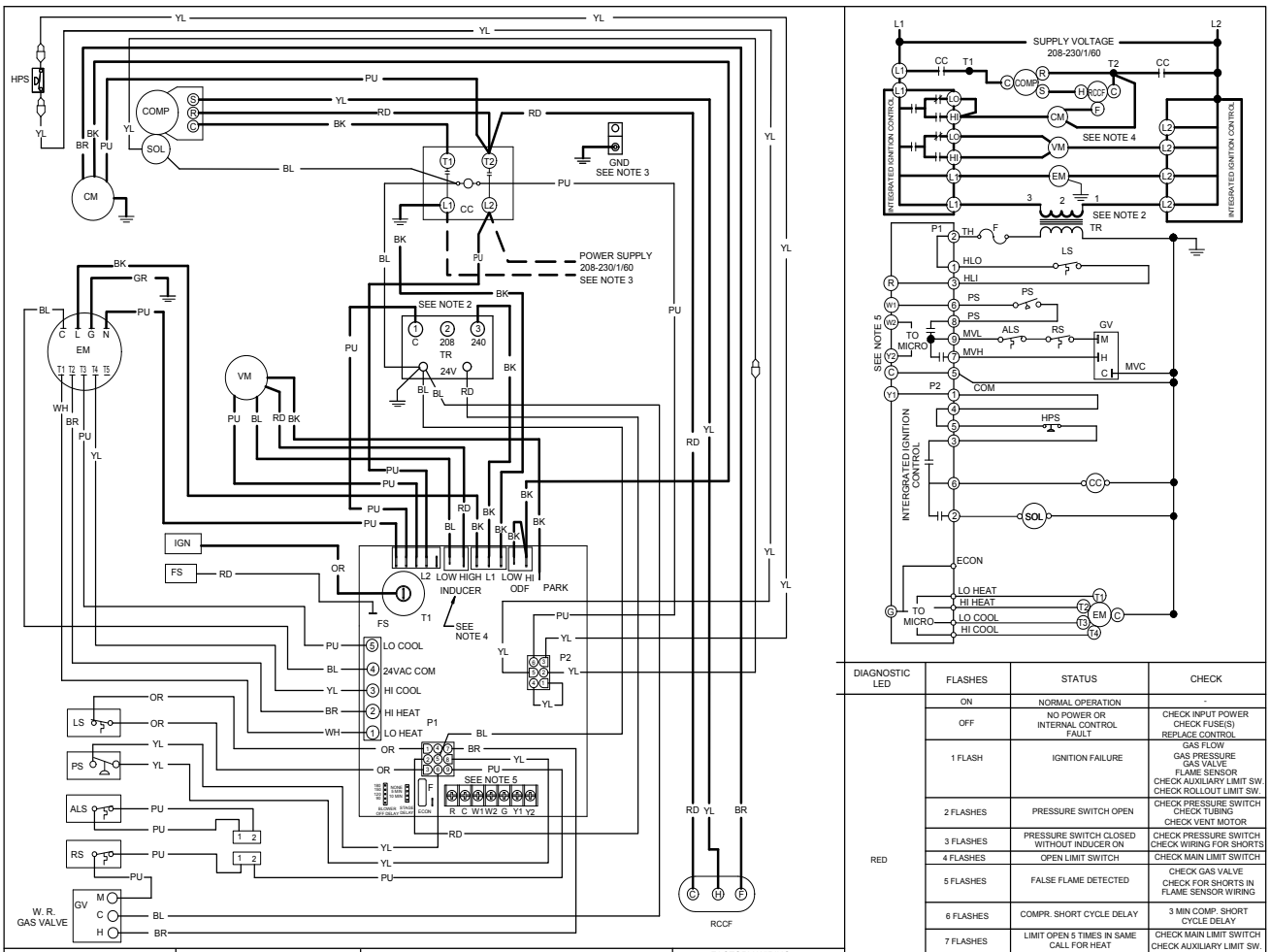

DIAGNOSTIC LED	FLASHES	STATUS	CHECK
RED	ON	NORMAL OPERATION	-
	OFF	NO POWER OR INTERNAL CONTROL FAULT	CHECK INPUT POWER CHECK FUSE(S) REPLACE CONTROL
	1 FLASH	IGNITION FAILURE	GAS FLOW GAS PRESSURE GAS VALVE FLAME SENSOR CHECK AUXILIARY LIMIT SW. CHECK ROLLOUT LIMIT SW.
	2 FLASHES	PRESSURE SWITCH OPEN	CHECK PRESSURE SWITCH CHECK TUBING CHECK VENT MOTOR
	3 FLASHES	PRESSURE SWITCH CLOSED WITHOUT INDUCER ON	CHECK PRESSURE SWITCH CHECK WIRING FOR SHORTS
	4 FLASHES	OPEN LIMIT SWITCH	CHECK MAIN LIMIT SWITCH
	5 FLASHES	FALSE FLAME DETECTED	CHECK GAS VALVE CHECK FOR SHORTS IN FLAME SENSOR WIRING
	6 FLASHES	COMPR. SHORT CYCLE DELAY	3 MIN COMP. SHORT CYCLE DELAY
	7 FLASHES	LIMIT OPEN 5 TIMES IN SAME CALL FOR HEAT	CHECK MAIN LIMIT SWITCH CHECK AUXILIARY LIMIT SW.
	8 FLASHES	IDT/ODT OPEN	CHECK JUMPER BETWEEN 1 AND 4 ON 6-CIRCUIT CONNECTOR
	9 FLASHES	PSW/LOC OPEN	CHECK REFRIGERANT SWITCHES FOR LOSS OF CHARGE OR HIGH HEAD PRESSURE
AMBER	OFF	NO FLAME PRESENT	-
	ON	NORMAL FLAME PRESENT	-
	1 FLASH	LOW FLAME SIGNAL	GAS FLOW GAS PRESSURE GAS VALVE FLAME SENSOR
	2 FLASHES	FALSE FLAME DETECTED	CHECK GAS VALVE CHECK FOR SHORTS IN FLAME SENSOR WIRING

COMPONENT LEGEND

ALS	AUXILLARY LIMIT SWITCH
CC	CONTACTOR
CM	CONDENSER MOTOR
COMP	COMPRESSOR
EM	EVAPORATOR MOTOR
F	FUSE
FS	FLAME SENSOR
GND	EQUIPMENT GROUND
GV	GAS VALVE
HLO	HI LIMIT OUTPUT
HLI	HI LIMIT INPUT
HPS	HIGH PRESSURE SWITCH
IGN	IGNITOR
IIC	INTEGRATED IGNITION CONTROL
LS	LIMIT SWITCH
MVL	MAIN GAS VALVE LOW
MVH	MAIN GAS VALVE HIGH
MVC	MAIN GAS VALVE COMMON
PS	PRESSURE SWITCH
ODF	OUTDOOR FAN
RCCF	RUN CAPACITOR FOR COMPRESSOR/FAN
RS	ROLLOUT SWITCH
SOL	SOLENOID (2ND STAGE COOL)
TR	TRANSFORMER
TH	TRANSFORMER HIGH
VM	VENT MOTOR

NOTES

1. REPLACEMENT WIRE MUST BE THE SAME SIZE AND TYPE OF INSULATION AS ORIGINAL.(USE COPPER CONDUCTOR ONLY).
2. FOR 208 VOLT TRANSFORMER OPERATION MOVE BLACK WIRE FROM TERMINAL 3 TO TERMINAL 2 ON TRANSFORMER.
3. USE COPPER CONDUCTORS ONLY
4. FOR 208V OPERATION, REMOVE BLUE LEAD FROM INDUCER LOW TERMINAL. MOVE BLACK LEAD FROM PARK TERMINAL ONTO INDUCER LOW TERMINAL. PLACE BLUE LEAD ON PARK TERMINAL.
5. USE NEC CLASS 2 WIRE FOR THERMOSTAT FIELD WIRING.

0140G04547-A

FACTORY WIRING
- LINE VOLTAGE
- LOW VOLTAGE
- OPTIONAL HIGH VOLTAGE

FIELD WIRING
- HIGH VOLTAGE
- LOW VOLTAGE

WIRE CODE

BK	BLACK
BL	BLUE
BR	BROWN
GR	GREEN
GY	GRAY
OR	ORANGE
PK	PINK
PU	PURPLE
RD	RED
WH	WHITE
YL	YELLOW

JUNCTION
TERMINAL
INTERNAL TO INTEGRATED CONTROL
PLUG CONNECTION
SWITCH (PRESS.)
OVERCURRENT PROT. DEVICE
EQUIPMENT GROUND
FIELD GROUND
FIELD SPLICE
SWITCH (TEMP)
IGNITER

Wiring is subject to change. Always refer to the wiring diagram or the unit for the most up-to-date wiring.

WARNING — ***High Voltage:*** Disconnect all power before servicing or installing this unit. Multiple power sources may be present. Failure to do so may cause property damage, personal injury, or death.

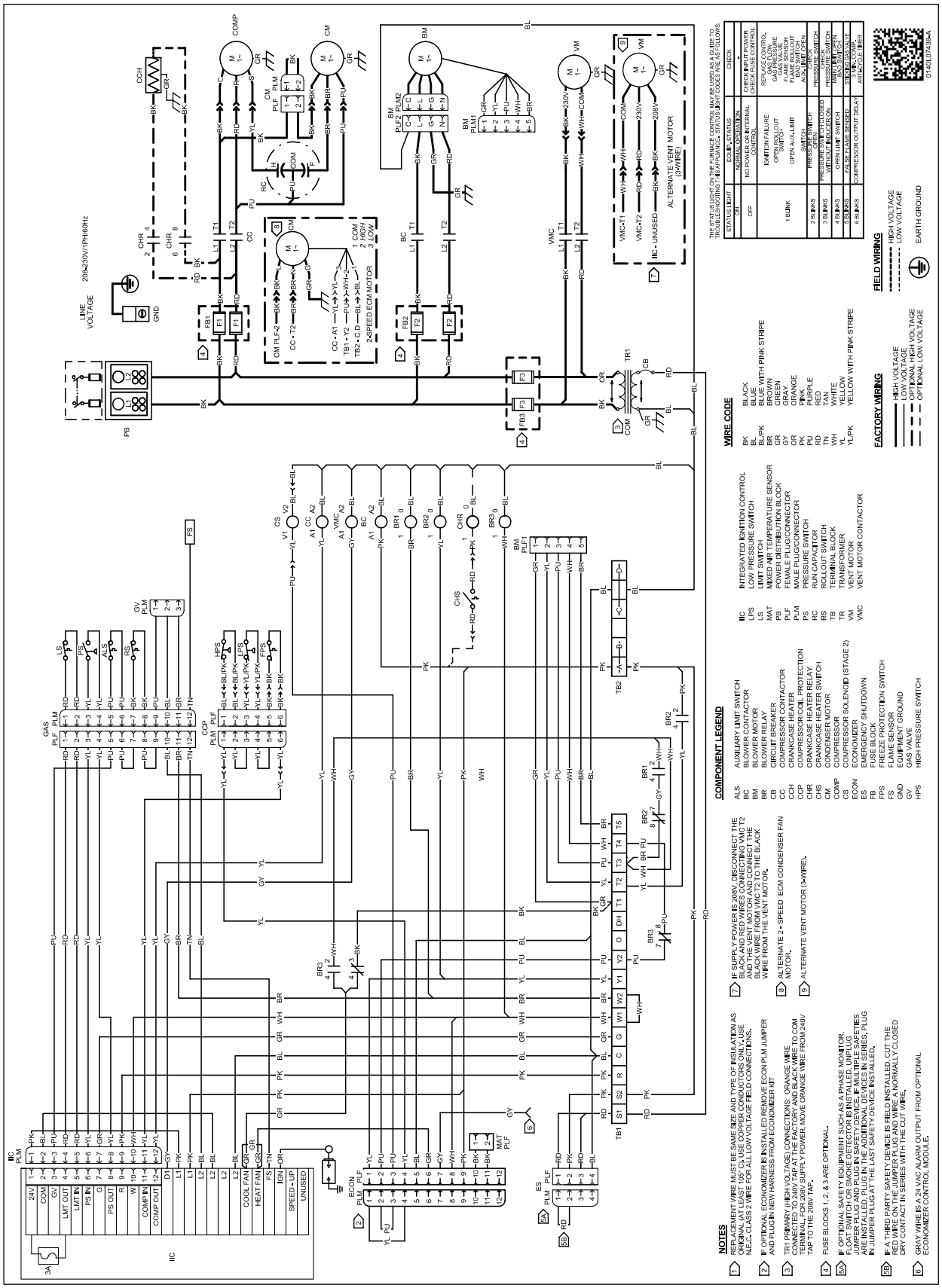

WARNING

High Voltage: Disconnect all power before servicing or installing this unit. Multiple power sources may be present. Failure to do so may cause property damage, personal injury, or death.

Wiring is subject to change. Always refer to the wiring diagram or the unit for the most up-to-date wiring.

FOR GPGM524-48***41** UNITS

ACCESSORY DESCRIPTION	ITEM NUMBER	
	MEDIUM CHASSIS	LARGE CHASSIS
Concentric Kit	CDK36	CDK4872
Downflow Economizer	PGEDJ101/102	PGEDJ103
Downflow Internal Filter Rack (with economizer)	DDNIFRPGMM	N/A (built into economizer)
Downflow Internal Filter Rack (no economizer)	DDNIFRPGA	DDNIFRPGA
Downflow Manual Damper	PGMDD101/102	PGMDD103
Downflow Motorized Damper	PGMDMD101/102	PGMDMD103
Downflow Square to Round	SQRPG101/102	SQRPG103
Economizer Wiring Harness (2-4 Tons)	0259L00412	0259L00412
External Horizontal Filter Rack	DPHFRA	DPHFRA
Flue Extension Kit	FLHDKT-1	FLHDKT-1
High-Altitude Kit	HA-03	HA-03
Horizontal Duct Cover	20464501PDGK	20464502PDGK
Horizontal Economizer	DHZECNJPGCHM	DHZECNJPGCHL
Horizontal Manual Damper	PGMDH102	PGMDH103
Horizontal Motorized Damper	PGMDMH102	PGMDMH103
Horizontal Square to Round	SQRPGH101/102	SQRPGH103
Internal Horizontal Filter Rack	DHZIFRPGCHA	DHZIFRPGCHA
LP Conversion Kit	LPM-08	LPM-08
Outdoor Thermostat with Housing	OTDFPKG-01	OTDFPKG-01
Roof Curb	D14CRBPGCHMA	D14CRBPGCHMA

For GPGM560***41AA UNITS

ITEM #	DESCRIPTION
0221L00014	14" Roof Curb
0270L01166	25% Manual Fresh Air Damper
0270L01165	25% Motorized Fresh Air Damper
0270L01338	Concentric Duct Adapter Kit 18"
0270L01753	Downflow Low-Leak Economizer Enthalpy
0270L01755	Downflow Ultra Low-Leak Economizer Enthalpy
0270L01757	Horizontal Ultra Low-Leak Economizer Enthalpy
0270L01250	Hurricane Restraint Clips (for 0221L00014 Roof Curb)
0270L01261	Hurricane Restraint Clips
HAKT036150	High Altitude Kit
LPHE-036072	LP Conversion Kit
HEFLUE048060	Flue Extension Kit

Our continuing commitment to quality products may mean a change in specifications without notice.
©2022 ***DAIKIN COMFORT TECHNOLOGIES MANUFACTURING, L.P.*** • Houston, Texas • Printed in the USA.